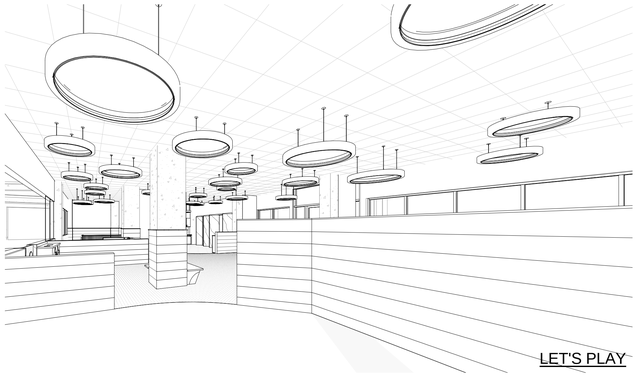

LET'S PLAY

RENDERING - CREATIVE CORNER

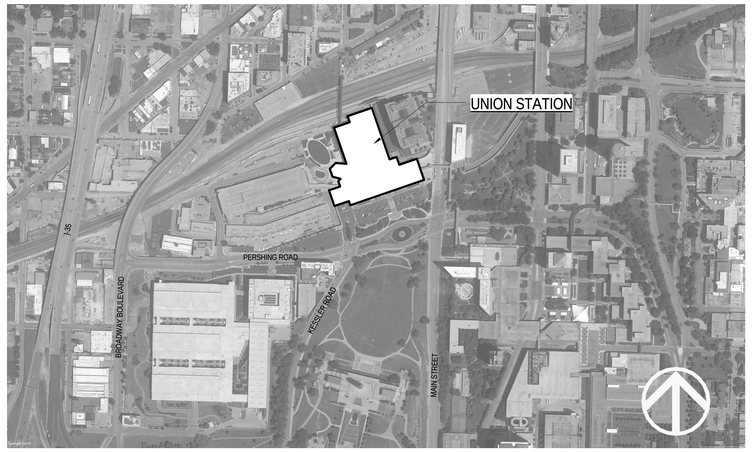

VICINITY MAP
N.T.S.

UNION STATION - SCIENCE CITY
EARLY CHILDHOOD EXHIBITS
PERMIT & CONSTRUCTION DOCUMENTS

JULY 3, 2019

SHEET LIST

ARCHITECTURAL

A001 COVER SHEET
A010 CODE PLAN
A110 GENERAL INFORMATION
A115 TYPICAL PARTITIONS
A210 DEMO PLANS - CREATIVE CORNER
A211 DEMO PLANS - LET'S PLAY
A220 DEMO PLAN - ALL ABOARD
A310 ENLARGED PLANS - CHILDREN'S EXHIBITS
A320 FLOOR PLAN - ALL ABOARD
A321 ENLARGED PLANS - ALL ABOARD
A510 SECTIONS - EXHIBITS
A512 ELEVATIONS / DETAILS - CHILDREN'S EXHIBITS
A610 RCP - CHILDREN'S EXHIBITS
A620 RCP - ALL ABOARD
A710 DOOR SCHEDULE - CREATIVE CORNER
A711 DOOR DETAILS - CREATIVE CORNER
A712 DOOR SCHEDULE - LET'S PLAY / ALL ABOARD
A810 INTERIOR ELEVATIONS - CREATIVE CORNER
A811 INTERIOR ELEVATIONS - LET'S PLAY
A812 INTERIOR ELEVATIONS - LET'S PLAY
A813 INTERIOR ELEVATIONS - WALKWAY SIDES
A815 INTERIOR DETAILS - CREATIVE CORNER
A817 INTERIOR DETAILS - LET'S PLAY
A818 INTERIOR DETAILS - LET'S PLAY
A819 INTERIOR DETAILS - LET'S PLAY MILLWORK
A820 INTERIOR ELEVATIONS - ALL ABOARD
A825 INTERIOR DETAILS - ALL ABOARD
A910 FINISH SCHEDULES - ALL EXHIBITS
A911 FLOOR FINISH PLAN - CREATIVE CORNER
A912 FLOOR FINISH PLAN - LET'S PLAY
A915 EXHIBIT PLANS - CHILDREN'S EXHIBITS
A921 FLOOR FINISH PLAN - ALL ABOARD
A925 EXHIBIT PLAN - ALL ABOARD

MECHANICAL

M210 MECHANICAL DEMOLITION PLAN
M310 MECHANICAL PLAN
M710 MECHANICAL SCHEDULES
M810 MECHANICAL DETAILS

PLUMBING

P310 PLUMBING PLAN
P311 ENLARGED PLUMBING PLANS
P710 PLUMBING SCHEDULES
P810 PLUMBING DETAILS

FIRE PROTECTION

FP310 FIRE PROTECTION PLAN
FP810 FIRE PROTECTION DETAILS

ELECTRICAL

E210 ELECTRICAL DEMOLITION
E310 POWER PLAN
E410 LIGHTING PLAN
E510 SYSTEMS PLAN
E710 ELECTRICAL SCHEDULES
E711 ELECTRICAL SCHEDULES
E810 ELECTRICAL ONE-LINE DIAGRAM
E811 ELECTRICAL DETAILS

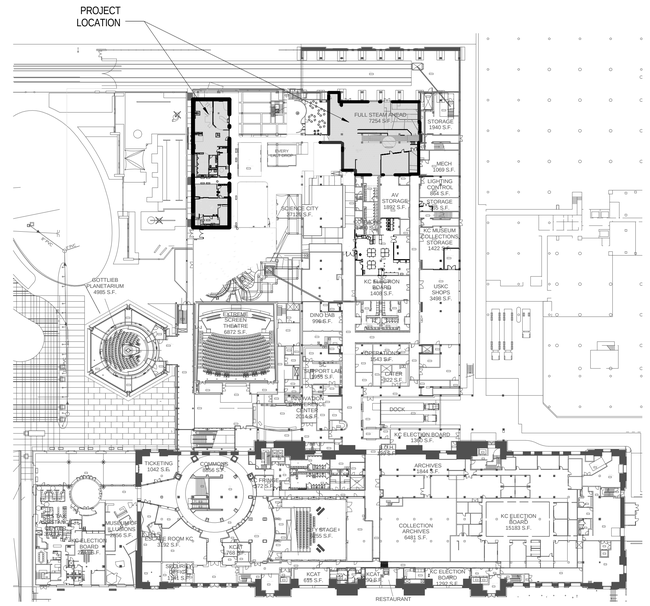

LEVEL B LOCATION PLAN
N.T.S.

PROJECT TEAM

OWNER

UNION STATION KANSAS CITY
30 W PERSHING ROAD
KANSAS CITY, MO 64108
(816) 460 - 2000

ARCHITECT

PGAV ARCHITECTS
1900 W. 47TH PL, SUITE #300
WESTWOOD, KS 66205
(913) 362 - 6500

EXHIBIT DESIGNER

BOSTON CHILDREN'S MUSEUM
308 CONGRESS STREET
BOSTON, MA 02210

MEP ENGINEER

BGR CONSULTING ENGINEERS
8908 W. 106TH ST.
OVERLAND PARK, KS 66212
(816) 842-2800

PGAV ARCHITECTS
PECKHAM GUYTON ALBERS & VIETS, INC.
1900 W 47th Place, #300, Westwood, KS 66205
(913) 362-6500 www.PGAV.COM

Copyright ©2019

STATE OF MISSOURI
MICHAEL ALAN SCHAADT
NUMBER A-8073
REGISTERED ARCHITECT

THE SEAL AND SIGNATURE APPLY ONLY TO THE DOCUMENT TO WHICH IT IS AFFIXED AND DOES NOT EXTEND TO ANY OTHER RESPONSIBILITY FOR ALL OTHER PLANS, SPECIFICATIONS, ESTIMATES, REPORTS, OR OTHER DOCUMENTS OR INSTRUMENTS RELATIVE TO OR INTENDED FOR USE ON ANY PART OR PARTS OF THE ARCHITECTURAL OR ENGINEERING PROJECT.

bgr CONSULTING ENGINEERS

#	DATE	DESCRIPTION

USKC EARLY CHILDHOOD EXHIBITS

SCIENCE CITY @ UNION STATION
30 W. PERSHING RD
KANSAS CITY, MO 64108

CONSTRUCTION DOCUMENTS

Original Size: 1 1/2" Drawing may have been reduced.
0" 1"

COVER SHEET

DATE: 07/03/19
DRAWN: PGAV | CHECKED: PGAV
PGAV # 53494-00 | CLIENT #
SHEET #: A001

7/3/2019 2:29:26 PM C:\Users\chris.tuuri\Desktop\53494-00_USKC_Childrens-Exhibits_cltuuri(Recovery).rvt

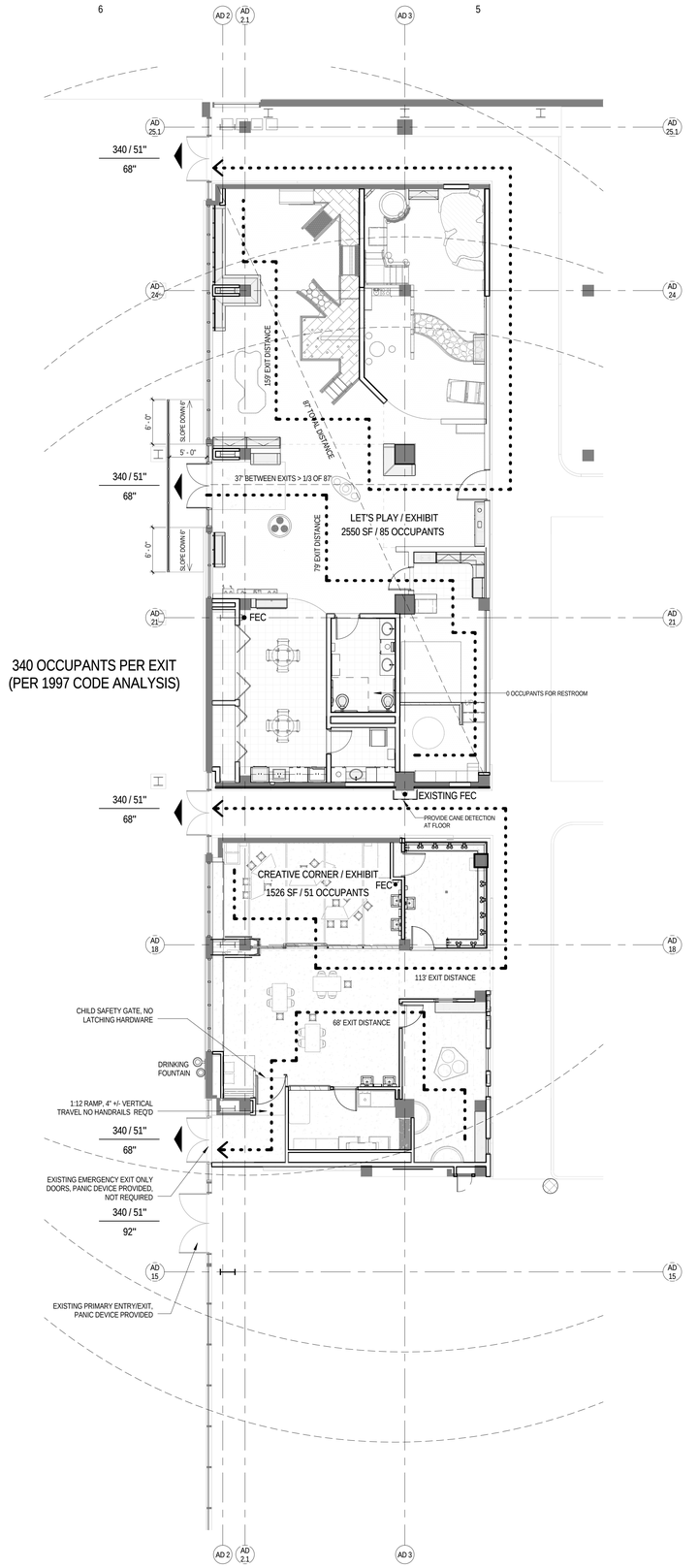

CHILDREN'S EXHIBITS - OVERALL PLAN
1/8" = 1'-0" **A6**

NEW TRAIN EXHIBIT FLOOR PLAN
1/8" = 1'-0" **C1**

PROJECT DESCRIPTION:

THIS PROJECT WILL RENOVATE APPROXIMATELY 13,300 SF OF EXISTING EXHIBIT SPACE WITHIN SCIENCE CITY AT UNION STATION TO CREATE THREE NEW EXHIBIT AREAS DESIGNED SPECIFICALLY FOR CHILDREN AGES 0 TO 7; CREATIVE CORNER, LET'S PLAY, AND ALL ABOARD. THESE DOCUMENTS ARE INTENDED TO ILLUSTRATE & DESCRIBE GENERAL RENOVATION SCOPE FOR PERMIT & CONSTRUCTION. REFER TO CONTROL DOCUMENTS PREPARED BY BOSTON CHILDREN'S MUSEUM DATED JANUARY 28, 2019 & MAY 17, 2019 FOR EXHIBITS AND GRAPHICS TO BE FABRICATED & INSTALLED UNDER SEPARATE CONTRACT.

APPLICABLE CODES:

2012 INTERNATIONAL BUILDING CODE (IBC) AND AMENDMENTS
2012 INTERNATIONAL MECHANICAL CODE
2012 UNIFORM PLUMBING CODE
2011 NATIONAL ELECTRICAL CODE
2010 ADA
NFPA 13 INSTALLATION OF SPRINKLER SYSTEMS

OCCUPANCY CLASSIFICATION: (CHAPTER 3)

GROUP A3, ASSEMBLY

TYPE OF CONSTRUCTION: (CHAPTER 6)

TYPE 1-A, FULLY SPRINKLERED

OCCUPANT LOAD FACTORS: (TABLE 1004.1.2)

30 NSF/OCC BASED ON EXHIBIT GALLERY AND MUSEUM

RENOVATION SPACE OCCUPANCY LOAD:

30 NSF/OCC BASED ON EXHIBIT GALLERY AND MUSEUM

300 GSF/OCC BASED ON MECHANICAL/STORAGE

PER THE 1997 CODE ANALYSIS, LEVEL 'B' OF THE BUILDING HAD SPARE EGRESS CAPACITY FOR UP TO 372 ADDITIONAL OCCUPANTS. THE RENOVATION AREA WAS PREVIOUSLY CALCULATED AS ASSEMBLY UNCONCENTRATED AT 15/NSF/PERSON SO OCCUPANT LOAD IS REDUCED.

EXIT TRAVEL DISTANCE: (TABLE 1016.2)

MAX TRAVEL DIST. WITH SPRINKLER = 250 FT.

FIRE RESISTIVE RATED CONSTRUCTION: (TABLE 601, 602):

STRUCTURAL FRAME: 3 HOUR
INTERIOR BEARING WALLS 3 HOUR
EXTERIOR BEARING WALLS 3 HOUR
NON-BEARING INT. PARTITIONS 0 HOUR
FLOOR CONSTRUCTION 2 HOUR
ROOF CONSTRUCTION 1 1/2 HOUR

CODE SYMBOLS

Symbol	Description	Protection Elements
	Exit - Exterior	
	Exit - Interior	Assembly Occupancies over 50 & exits from floors.
Conf. / Occ. / SF / 63	Room Designation & Occupancy	Room Name / Occupancy Type SF/ Max. Allowable Occupants
	Fire Extinguisher	
	Fire Extinguisher Spacing (Show radius)	Show Radius

PGAV ARCHITECTS
PECKHAM GUYTON ALBERS & VIETS, INC.
1900 W. 47th Place, #300, Westwood, KS 66205
(913) 362-6500
www.PGAV.COM
Copyright ©2019

STATE OF MISSOURI
MICHAEL ALAN SCHAADT
NUMBER A-6071
REGISTERED ARCHITECT

THE SEAL AND SIGNATURE APPLY ONLY TO THE DOCUMENT TO WHICH IT IS AFFIXED AND NOT TO ANY REVISIONS OR ADDITIONS OR RESPONSIBILITY FOR ALL OTHER PLANS, SPECIFICATIONS, ESTIMATES, REPORTS, OR OTHER DOCUMENTS OR INSTRUMENTS RELATIVE TO OR INTENDED TO BE A PART OF OR SUPPLEMENT TO ANY PARTS OF THE ARCHITECTURAL OR ENGINEERING PROJECT.

bgr CONSULTING ENGINEERS

#	DATE	DESCRIPTION

USKC EARLY CHILDHOOD EXHIBITS

SCIENCE CITY @ UNION STATION
30 W. PERSHING RD
KANSAS CITY, MO 64108

CONSTRUCTION DOCUMENTS

Original Size: 1 1/2" Drawing may have been reduced.
0" 1"

CODE PLAN

DATE: 07/03/19
DRAWN: PGAV
CHECKED: PGAV
PGAV #: 53494-00
CLIENT #:
SHEET #: A010

C:\Users\chris.tuxch\Desktop\53494-00_USKC_Childrens-Exhibits_chtuxch(Recovery).rvt
7/3/2019 2:29:38 PM

ABBREVIATIONS

∠	Angle
℄	Center Line
[	Channel

A

AT	Acoustic Tile
ADA or ADAAG	Americans with Disabilities Act Accessibility Guidelines
AD	Area Drain
ADJ.	Adjustable
AFF.	Above Finish Floor
AHU	Air Handling Unit
ALT.	Alternate
ALUM.	Aluminum
ASA	American Standards Association Inc.
ASTM	American Society for Testing Materials
AUTO.	Automatic
AUX.	Auxiliary
AVG.	Average

B

BD.	Board
BLDG.	Building
BLK.	Block
BLKG.	Blocking
BLT-IN	Built-in
B.M.	Bench Mark
BM.	Beam
B.O.F.	Bottom of Footing
BOT.	Bottom
BRG.	Bearing
BSMT.	Basement

C

CAB.	Cabinet
C.B.	Catch Basin
CHAM.	Chamfer
C.I.P.	Cast In Place
CG	Corner Guard
CHEM.	Chemical
CJ	Control Joint
C.L.	Center Line
CLNG.	Ceiling
CM	Centimeters
CMU	Concrete Masonry Unit
C.O.	Clean Out
COL.	Column
COMP.	Composition
CONC.	Concrete
CONF.	Conference
CONT.	Continuous
CONTR.	Contractor
COR.	Corner
CP	Carpet
CPT.	Carpet Tile
C.T.	Continued
CTD.	Ceramic Tile
CU	Condensing Unit
C.W.	Cold Water
CWALL	Curtain Wall
CYL.	Cylinder

D

D.B.	Decibel
DBL.	Double
DET.	Detail
D.F.	Drinking Fountain
DIA.	Diameter
DIM.	Dimension
DN.	Down
DR.	Door
D.S.	Downspout
DUP.	Duplicate
DWG.	Drawing
DWL.	Dowel

E

E.H.	Electric Heater
EJ.	Expansion Joint
ELEV.	Elevator
ENTR.	Entrance
EP	Electrical Panelboard
EQ.	Equal
EWC.	Electric Water Cooler
EWH.	Electric Water Heater
EXH.	Exhaust
EXP.	Expansion
EP.	Epoxy Paint
ELEC.	Electrical
EXIS.	Existing

F

F	Finished Filler (casework)
F.A.	Fire Alarm
FB	Face Brick
FC	Footcandle
F.D.	Floor Drain
FDN.	Foundation
FEC	Fire Extinguisher Cabinet
F.F.	Finish Floor
F.F.E.	Finish Floor Elevation
F.H.C.	Fire Hose Cabinet
F.HYD.	Fire Hydrant
FIN.	Finish
F.O.	Face of
F.O.M.	Face of Masonry
F.O.S.	Face of Stud
F.O.W.	Face of Wall
F.P.	Fireproof
FR.	Frame
FRD.	Fire Damper
F.S.	Full Size
FT	Foot or Feet
FTG.	Footing
FUR.	Furring
F.V.	Field Verify

G

GA.	Gauge
GAL.	Gallon
GALV.	Galvanized
G.C.	General Contractor
GSKT.	Gasket
GL.	Glass / Glazing
GFRC.	Fiberglass-Reinforced Concrete
GND.	Ground
GPM.	Gallons per Minute
GR.	Grade
GT.	Grout
GYP.	Gypsum

H

H.B.	Hose Bibb
H.C.	Hollow Core
HD.	Head
HDCP.	Handicapped (Accessible)
HDR.	Header
HDW.	Hardware
HDWD.	Hardwood
HM.	Hollow Metal
HP.	High Pressure
H.PT.	High Point
HR.	Hour
HT.	Height
HTG.	Heating
HTR.	Heater
HVAC	Heating, Vetilation & Air Conditioning
H.W.	Hot Water
HSS	Hollow Structural Shape
HAZ.	Hazardous

I

I.D.	Inside Diameter
INCAN.	Incandescent
INFO.	Information
INT.	Interior
IRREG.	Irregular
IGU.	Insulated Glass Unit

J

JAN.	Janitor
JCT.	Junction
JST.	Joist
JT.	Joint

K

K.D.	Kiln Dried
K.O.	Knock Out
KPL.	Kickplate

L

LAM.	Laminate(d)
LAV.	Lavatory
LBS. or #	Pounds
LIN.	Linear
L.L.	Live Load
L.PT.	Low Point
LVR.	Louver
LW.	Lightweight

M

M	Meter(s)
MACH.	Machine
MAINT.	Maintenance
MAS.	Masonry
MATL.	Material(s)
MAX.	Maximum
MECH.	Mechanical
MED.	Medium
MEP	Mechanical, Electrical, & Plumbing
MFR.	Manufacture(r)
M.H.	Manhole
MIN.	Minimum
MISC.	Miscellaneous
MM	Millimeter(s)
M.O.	Masonry Opening
M.R.	Moisture Resistant
MTD.	Mounted
MTG.	Meeting
MTL.	Metal
MULL.	Mullion

N

NO. or #	Number
NOM.	Nominal
NRC.	Noise Reduction Coefficient
NTS.	Not To Scale

O

O.C.	On Center
O.D.	Outside Diameter
OFD.	Overflow Drain
OPG.	Opening
OPHD.	Opposite Hand
OPP.	Opposite
OTO.	Out to Out
OTS.	Open To Structure

P

PEMB.	Pre-engineered Metal Building
PFN.	Prefinished
PLAT.	Platform
PLUM.	Plumbing
PNL.	Panel
POL.	Polished
PR.	Pair
PRCST.	Precast
PREFAB	Prefabricated
PRELIM.	Preliminary
PRF.	Preformed
PROJ.	Projection
PT.	Point
PTD.	Painted
PTN.	Partition
PVC	Polyvinyl Chloride
PVT.	Private

Q

QT.RND.	Quarter-Round
QTY.	Quantity

R

RAD.	Radius
R.B.	Rubber Base
RCP.	Reflected Ceiling Plan
R.D.	Roof Drain
RE:	Reference
REBAR	Reinforcing Bar
RECP.	Receptacle
REF.	Reference
REG.	Register
REINF.	Reinforcement(ed)
REQD.	Required
REV.	Revision
RM.	Room
RND.	Round
R.O.	Rough Opening
R.O.W.	Right of Way

S

S.C.	Solid Core
SCHED.	Schedule
SCN.	Screen
S.D.	Storm Drain
SECT.	Section
SEW.	Sewer
SF	Square Foot / Feet
SHT.	Sheet
SHWR.	Shower
SIM.	Similar
S.M.	Sheet Metal
SPEC.	Specification(s)
SPK.	Speaker
SPKLR.	Sprinkler
SP.BL.	Splash Block
SQ.	Square
SS	Stainless Steel
SSG.	Structural Silicone Glazing
SSRF.	Solid Surface
ST.	Stair
STAG.	Staggered
STC.	Sound Transmission Coefficient
STD.	Standard
STGR.	Stringer
STL.	Steel
STO.	Storage
STOR.	Storage
STRUC.	Structural
SUBFL.	Subfloor
SUSP.	Suspended

T

T&G	Tongue & Groove
TAN.	Tanget
TEL.	Telephone
TEMP.	Temperature / Tempered
THK.	Thick
T.O.C.	Top of Concrete / Curb
T.O.S.	Top of Slab / Steel
TYP.	Typical

U

UNEX.	Unexcavated
UNFIN.	Unfinished
U.N.O.	Unless Noted Otherwise
U.O.N.	Unless Otherwise Noted
UPS	Uniterrupted Power Supply

V

VNR.	Veneer

W

W	W-shape Steel Beam
W/	With
W/I	Within
W/O	Without
WD.	Wood
WDW.	Window
W.V.	Wall Vent
WWF.	Welded Wire Fabric
WG	Wall Guard

SYMBOL LEGEND

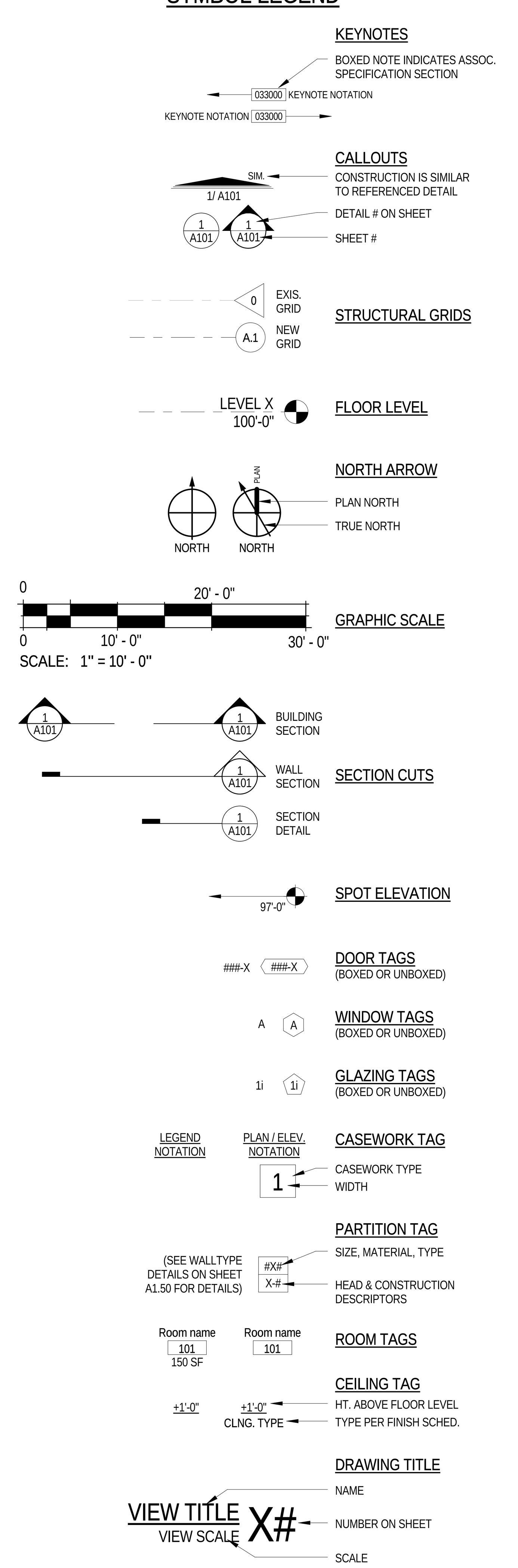

MATERIAL PATTERNS

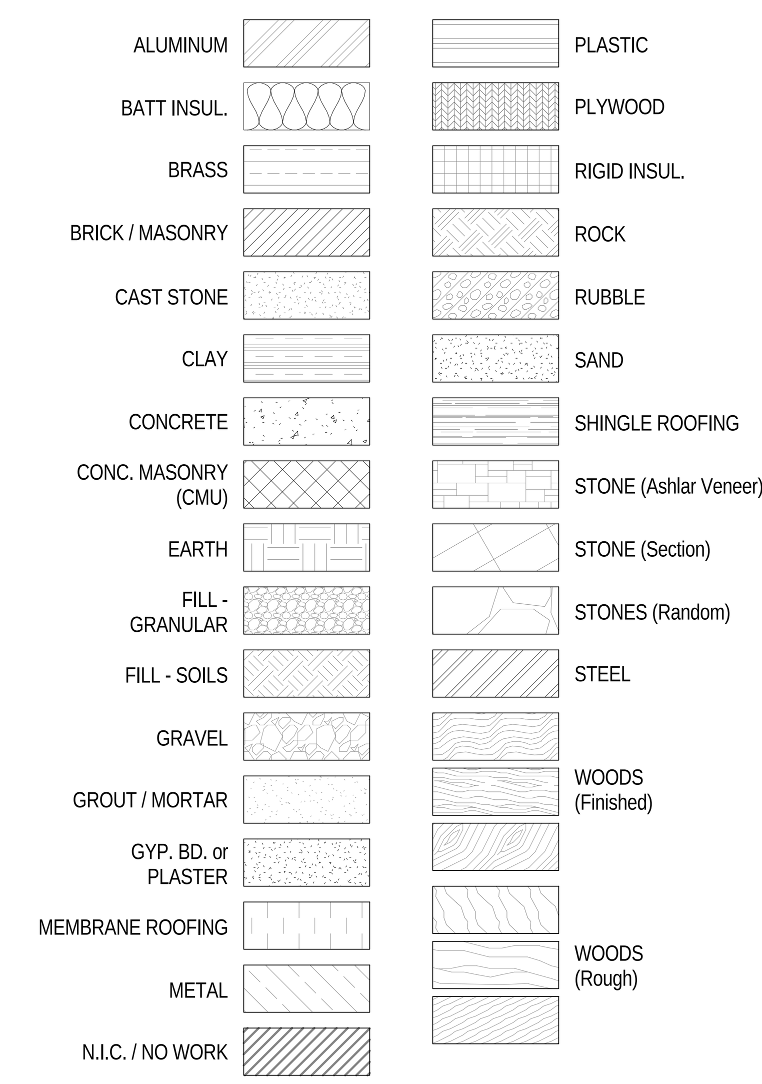

KEYNOTE ANNOTATIONS

GENERAL NOTES:
KEYNOTES ARE PROVIDED THROUGHOUT THE DRAWINGS TO INDICATE WHERE MORE INFORMATION IS DEFINED ON SPECIFIC COMPONENTS, FINISHES, EQUIPMENT, AND/OR ASSOCIATED ASSEMBLIES.

KEYNOTES DO NOT INDICATE OR LIMIT A SPECIFIC TRADES SCOPE OF WORK, NOR DO THEY RELIEVE ANY REQUIREMENTS TO REVIEW THE ENTIRE SET OF CONTRACT DOCUMENTS FOR PERTINENT INFORMATION TO WORK BEING PERFORMED.

KEYNOTE	SPEC TITLE
024119	SELECTIVE DEMOLITION
033000	CONCRETE
054000	COLD FORMED METAL FRAMING
055000	COLD FORMED METAL FRAMING
055123	PIPE AND TUBE RAILINGS
061053	MISC. ROUGH CARPENTRY
062023	INTERIOR FINISH CARPENTRY
064116	ARCHITECTURAL CABINETS
072100	THERMAL INSULATION
072726	FLUID APPLIED MEMBRANE AIR BARRIERS
079200	JOINT SEALANT
081213	HOLLOW METAL FRAMES
081416	FLUSH WOOD DOORS
083113	ACCESS DOORS AND FRAMES
084113	ALUMINUM FRAMED STOREFRONT
087100	DOOR HARDWARE
088000	GLAZING
092216	NON-STRUCTURAL METAL FRAMING
092900	GYPSUM BOARD
093000	CERAMIC TILE
095113	ACOUSTICAL PANEL CEILINGS
096513	RESILIENT BASE AND ACCESSORIES
096516	RUBBER SHEET FLOORING
096519	RESILIENT TILE FLOORING
096543	LINOLEUM FLOORING
096700	FLUID-APPLIED FLOORING
096800	CARPETING
099123	INTERIOR PAINTING
099300	STAINING AND TRANSPARENT FINISHING
101400	PANEL SIGNAGE
102600	WALL AND DOOR PROTECTION
102800	TOILET ACCESSORIES AND MIRRORS
104413	FIRE EXTINGUISHER CABINETS
105910	COUNTER BRACKETS
123623	PLASTIC LAMINATE CLAD COUNTERTOPS
123661	SOLID SURFACING COUNTERTOPS
MEP	RE: MEP

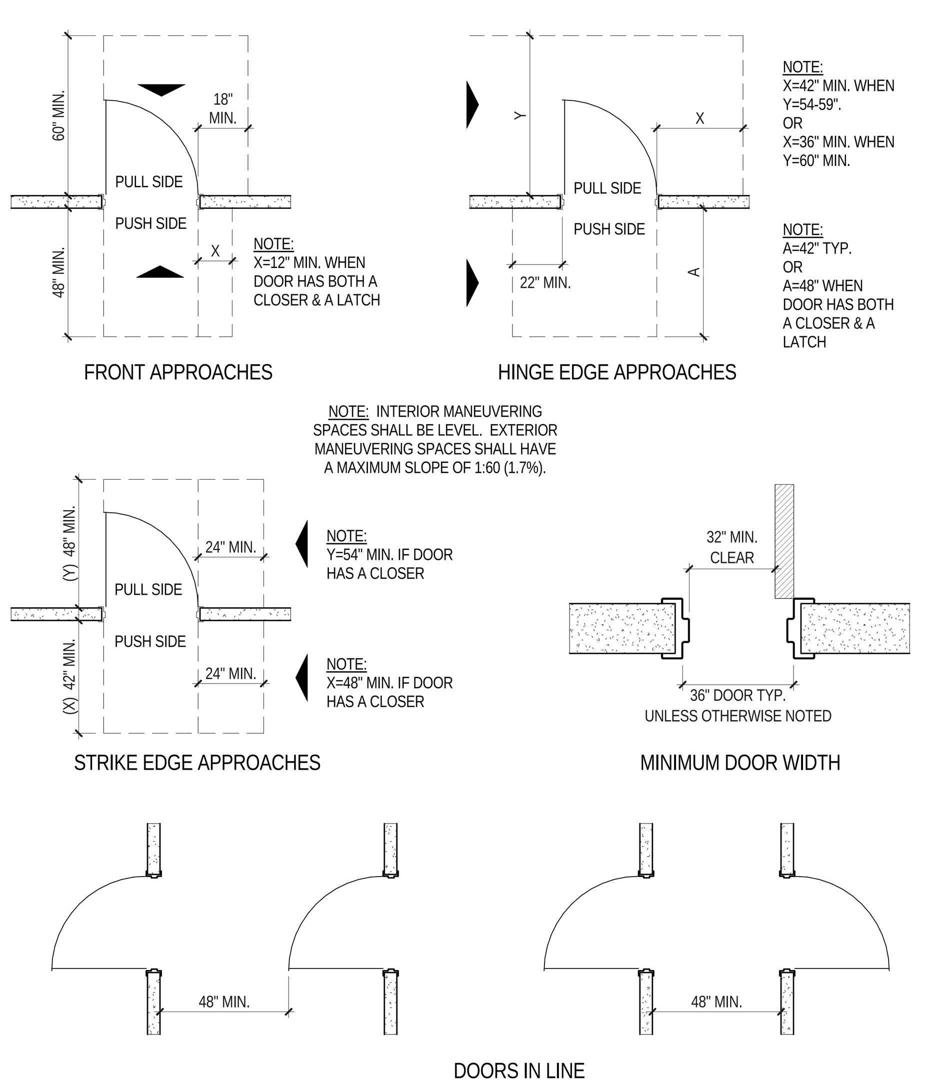

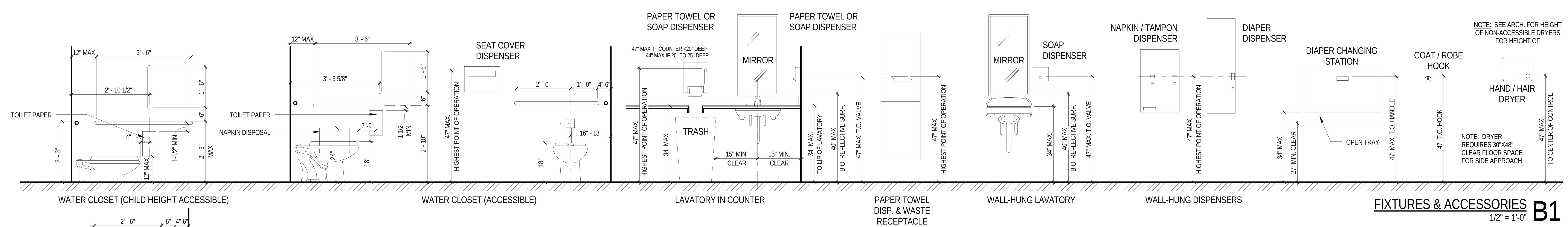

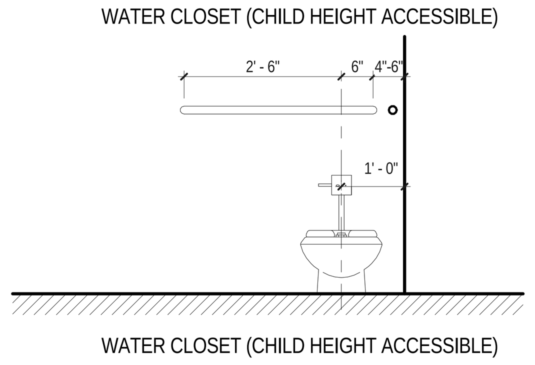

FIXTURES & ACCESSORIES B1
1/2" = 1'-0"

2010 ADA STANDARDS TYPICAL MIN. DIMENSIONS GENERAL NOTES.
1. THESE DIAGRAMS DEPICT MIN. DIMENSIONS AS REQUIRED BY THE AMERICANS WITH DISABILITIES ACT GUIDELINES PUBLISHED 2010.
2. GENERAL CONTRACTOR IS TO REVIEW FIELD LAYOUT AGAINST THESE MIN. DIMENSIONS AND NOTIFY ARCHITECT IF MINIMUM DIMENSIONS ARE ENCROACHED UPONG PRIOR TO INSTALLATION.
3. NOT ALL ADAAG DIAGRAMS SHOWN HERE MAY PERTAIN TO THIS PROJECT.

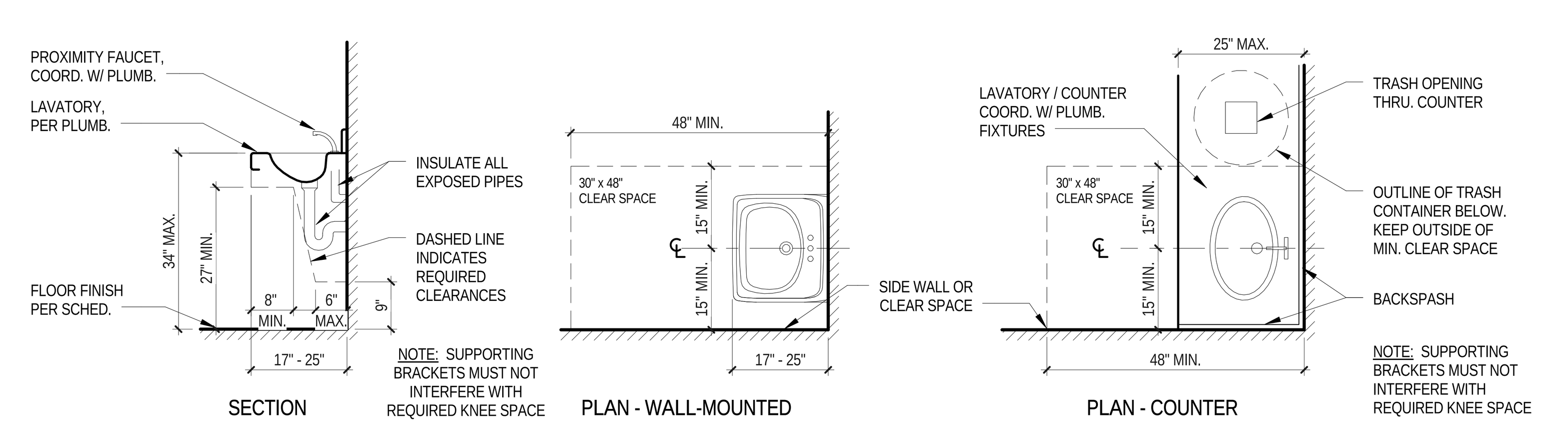

LAVATORY CLEARANCES A2
1/2" = 1'-0"

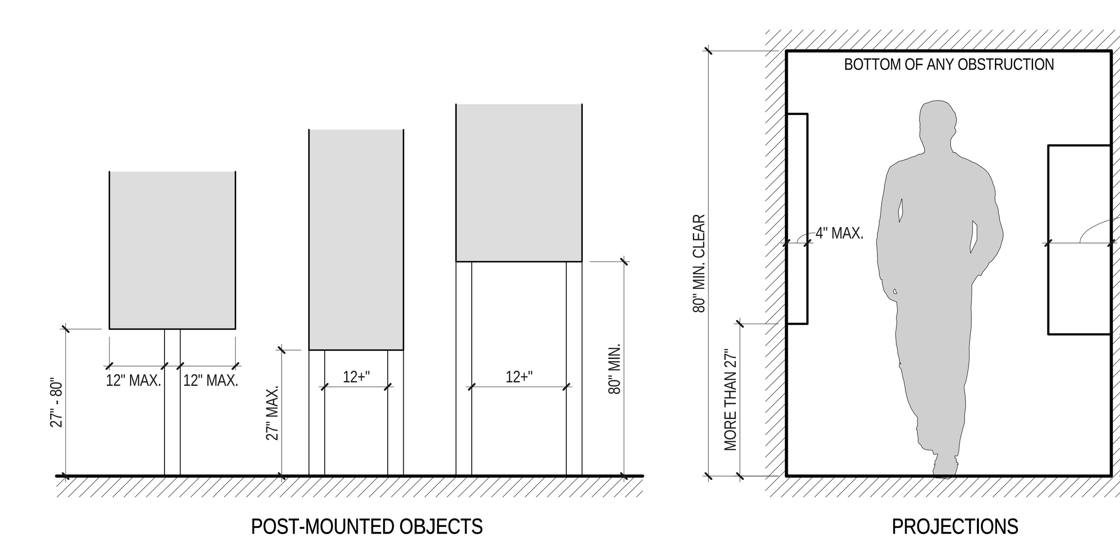

PROTRUDING OBJECTS A1
1/2" = 1'-0"

PGAV ARCHITECTS
PECKHAM GUYTON ALBERS & VIETS, INC.
1900 W.47th Place, #300, Westwood, KS 66205
(913) 362-6500 www.PGAV.COM

Copyright ©2019

STATE OF MISSOURI MICHAEL ALAN SCHAADT NUMBER A-6037 ARCHITECT 7-3-2019

THE SEAL AND SIGNATURE APPLY ONLY TO THE DOCUMENT TO WHICH THEY ARE AFFIXED, AND EXPRESSLY DISCLAIM ANY RESPONSIBILITY FOR ALL OTHER PLANS, SPECIFICATIONS, ESTIMATES, REPORTS, OR OTHER DOCUMENTS OR INSTRUMENTS RELATING TO OR INTENDED TO BE USED FOR ANY PART OR PARTS OF THE ARCHITECTURAL OR ENGINEERING PROJECT.

bgr CONSULTING ENGINEERS

#	DATE	DESCRIPTION

USKC CHILDREN'S EXHIBITS

SCIENCE CITY @ UNION STATION
30 W. PERSHING RD
KANSAS CITY, MO 64108

CONSTRUCTION DOCUMENTS

Original Size: 1 1/2" Drawing may have been reduced.

GENERAL INFORMATION

DATE: 07/03/19
DRAWN: PGAV
CHECKED: PGAV
PGAV #: 53494-00
CLIENT #:
SHEET #: A110

PGAV
C:\Users\chris.busch\Desktop\53494-00_USKC_Childrens-Exhibits_cbusch(Recovery).rvt
7/3/2019 2:29:40 PM

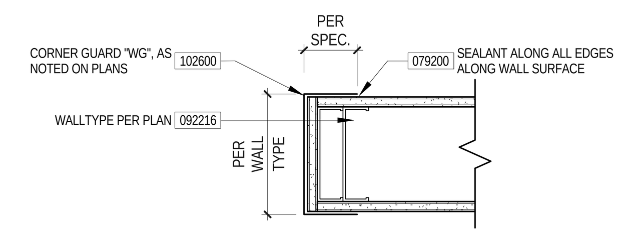

GYP. WALL DETAIL - END GUARD "WG"

GYP WALL - END GUARD "WG"
1 1/2" = 1'-0"

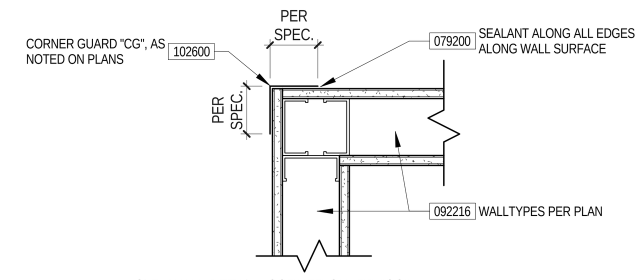

GYP. WALL DETAIL - CORNER GUARD "CG"

GYP WALL - CORNER GUARD "CG"
1 1/2" = 1'-0"

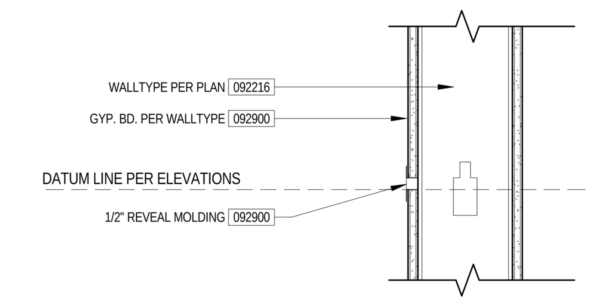

GYP. WALL DETAIL - TYP. REVEAL

GYP WALL - REVEAL
1 1/2" = 1'-0"

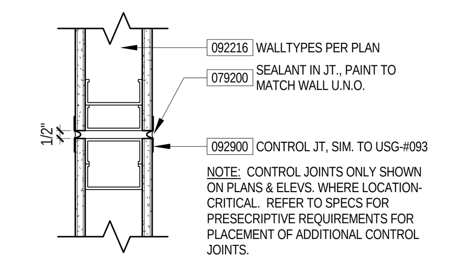

GYP. WALL DETAIL - CONTROL JOINT "CJ"

GYP WALL - CONT. JOINT "CJ"
1 1/2" = 1'-0"

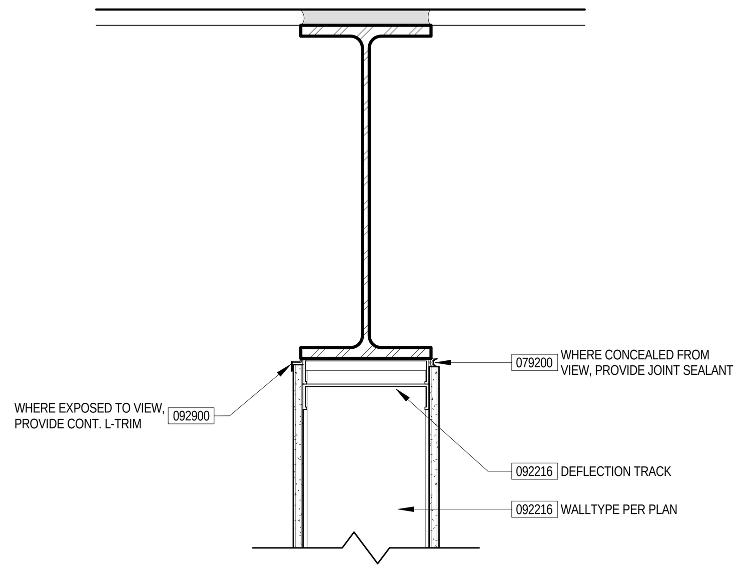

HEAD DETAIL - WALL UP TO NARROW BEAM (PARALLEL)

GYP HEAD OF WALL - BEAM PAR. & NARROW
1 1/2" = 1'-0"

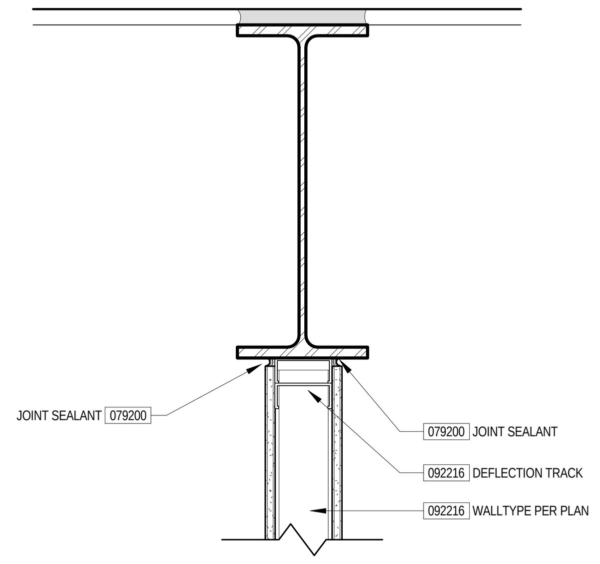

HEAD DETAIL - WALL UP TO WIDE BEAM (PARALLEL)

GYP HEAD OF WALL - BEAM PAR. & WIDE
1 1/2" = 1'-0"

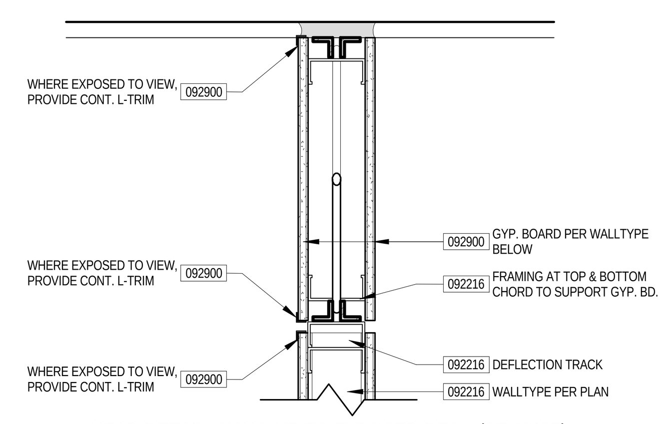

HEAD DETAIL - WALL UP TO EXPOSED DECK (AT JOIST)

GYP HEAD OF WALL - PAR TO JOIST
1 1/2" = 1'-0"

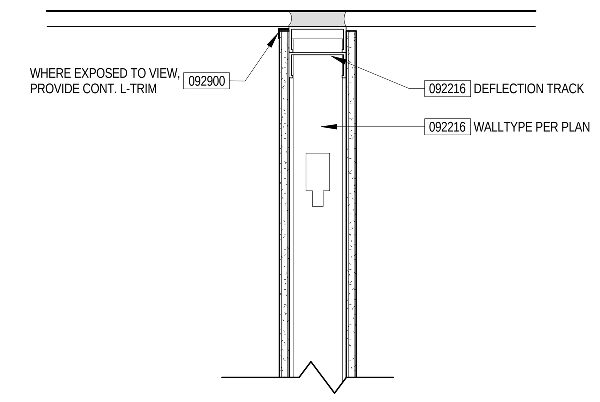

HEAD DETAIL - WALL UP TO EXPOSED DECK (PERPENDICULAR)

GYP HEAD OF WALL TO DECK - PERP.
1 1/2" = 1'-0"

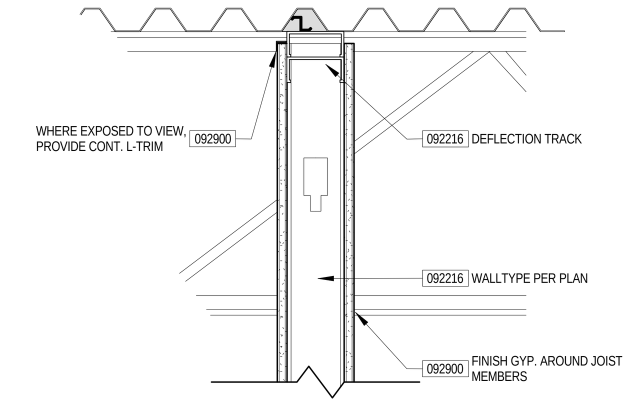

HEAD DETAIL - WALL UP TO EXPOSED DECK (PARALLEL)

GYP HEAD OF WALL TO DECK - PAR.
1 1/2" = 1'-0"

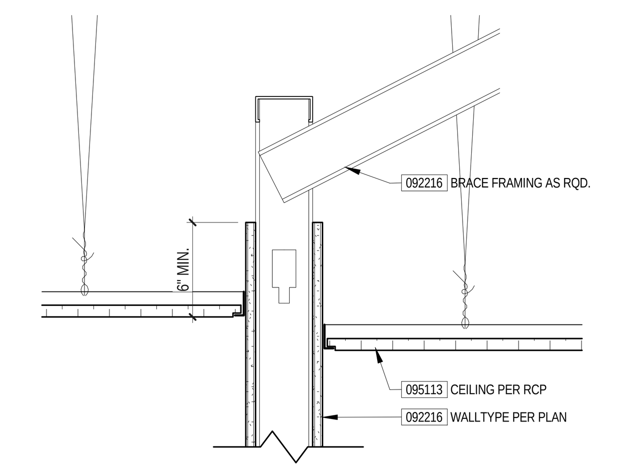

TYP. FOR HEAD CONDITION "A"

GYP HEAD OF WALL - SUSPENDED CEILING
1 1/2" = 1'-0"

Design No. U419

October 27, 2005

Nonbearing Wall Ratings -- 1, 2, 3 or 4 Hr
(See Items 3 & 4)

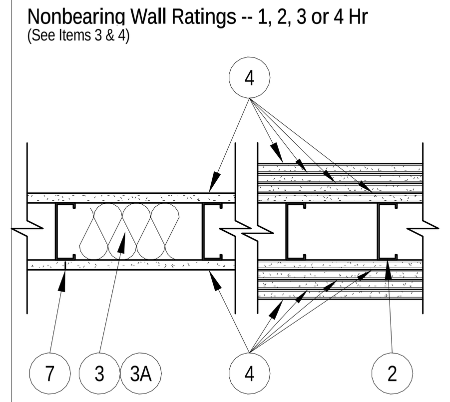

1. Floor and Ceiling Runners -- (Not shown) -- Channel shaped, fabricated from min 25 MSG corrosion-protected steel, min width to accommodate stud size, with min 1 in. long legs, attached to floor and ceiling with fasteners 24 in. OC max.

2. Steel Studs -- Channel shaped, fabricated from min 25 MSG corrosion-protected steel, min width as indicated under Item 4, min 1-1/4 in. flanges and 1/4 in. return, spaced a max of 24 in. OC. Studs to be cut 3/8 to 3/4 in. less than assembly height.

3. Batts and Blankets* -- (Required as indicated under Item 4) -- Mineral wool batts, friction fitted between studs and runners. Min nom thickness as indicated under Item 4. See Batts and Blankets (BKNV or BZJZ) Categories for names of Classified companies.

3A. Batts and Blankets* -- (Optional) -- Placed in stud cavities, any glass fiber or mineral wool insulation bearing the UL Classification Marking as to Surface Burning Characteristics and/or Fire Resistance. See Batts and Blankets (BKNV or BZJZ) Categories for names of Classified companies.

4. Gypsum Board* -- Gypsum panels with beveled, square or tapered edges, applied vertically or horizontally. Vertical joints centered over studs and staggered one stud cavity on opposite sides of studs. Vertical joints in adjacent layers (multilayer systems) staggered one stud cavity. Horizontal joints need not be backed by steel framing. Horizontal edge joints and horizontal butt joints on opposite sides of studs need not be staggered. Horizontal edge joints and horizontal butt joints in adjacent layers (multilayer systems) staggered a min of 12 in. The thickness and number of layers for the 1 hr, 2 hr, 3 hr and 4 hr ratings are as follows:

Wallboard Protection on Each Side of Wall

Rating	Min Stud Depth	No. of Layers & Thkns of Panel	Min Thickness of Insulation (Item 3)
1	3-1/2	1 layer, 5/8 in. thick	Optional
1	2-1/2	1 layer, 1/2 in. thick	1-1/2 in.
1	1-5/8	1 layer, 3/4 in. thick	Optional
2	1-5/8	2 layers, 1/2 in. thick	Optional
2	1-5/8	2 layers, 5/8 in. thick	Optional
2	3-1/2	1 layer, 3/4 in. thick	3 in.
3	1-5/8	3 layers, 1/2 in. thick	Optional
3	1-5/8	2 layers, 3/4 in. thick	Optional
3	1-5/8	3 layers, 5/8 in. thick	Optional
4	1-5/8	4 layers, 5/8 in. thick	Optional
4	1-5/8	4 layers, 1/2 in. thick	Optional
4	2-1/2	2 layers, 3/4 in. thick	2 in.

CANADIAN GYPSUM COMPANY -- 1/2 in. thick Type C, IP-X2 or IPC-AR; WRC, 5/8 in. thick Type AR, C, IP-AR, IP-X1, IP-X2, IPC-AR, SCX, SHX, WRX or WRC; 3/4 in. thick Types IP-X3 or ULTRACODE
UNITED STATES GYPSUM CO -- 1/2 in. thick Type C, IP-X2, IPC-AR or WRC; 5/8 in.thick Type SCX, SHX, WRX, IP-X1, AR, C, WRC, FRX-G, IP-AR, IP-X2, IPC-AR ; 3/4 in. thick Types IP-X3 or ULTRACODE
USG MEXICO S A DE C V -- 1/2 in. thick Type C, IP-X2, IPC-AR or WRC; 5/8 in. thick Type AR, C, IP-AR, IP-X1, IP-X2, IPC-AR, SCX, SHX, WRX, WRC or; 3/4 in. thick Types IP-X3 or ULTRACODE

When Item 6B, Steel Framing Members*, is used, Nonbearing Wall Rating is limited to 1 Hr. Min. stud depth is 3-1/2 in., min. thickness of insulation (Item 3) is 3 in., and two layers of gypsum board panels (1/2 in. or 5/8 in. thick) shall be attached to furring channels as described in Item 5. One layer of gypsum board panels (1/2 in. or 5/8 in. thick) attached to opposite side of stud without furring channels as described in Item 5.

4A. Gypsum Board* -- (As an alternate to Item 4) -- 5/8 in. thick, 2 ft. wide, tongue and groove edge, applied horizontally as the outer layer to one side of the assembly. Secured as described in Item 5. Joint covering (Item 7) not required.

CANADIAN GYPSUM COMPANY -- Type SHX.
UNITED STATES GYPSUM CO -- Type SHX.
USG MEXICO S A DE C V -- Type SHX.

5. Fasteners -- (Not shown) -- Type S or S-12 steel screws used to attach panels to studs (Item 2) or furring channels (Item 6). Single layer systems: 1 in. long for 1/2 and 5/8 in. thick panels or 1-1/4 in. long for 3/4 in. thick panels, spaced 8 in. OC when panels are applied horizontally, or 8 in. OC along vertical and bottom edges and 12 in. OC in the field when panels are applied vertically. Two layer systems: First layer- 1 in. long for 1/2 and 5/8 in. thick panels or 1-1/4 in. long for 3/4 in. thick panels, spaced 16 in. OC. Second layer- 1-5/8 in. long for 1/2 in., 5/8 in. thick panels or 2-1/4 in. long for 3/4 in. thick panels, spaced 16 in. OC with screws offset 8 in. from first layer. Three-layer systems: First layer- 1 in. long for 1/2 in., 5/8 in. thick panels, spaced 24 in. OC. Second layer- 1-5/8 in. long for 1/2 in., 5/8 in. thick panels, spaced 24 in. OC. Third layer- 2-1/4 in. long for 1/2 in., 5/8 in. thick panels or 2-5/8 in. long for 5/8 in. thick panels, spaced 12 in. OC. Screws offset min 6 in. from layer below. Four-layer systems: First layer- 1 in. long for 1/2 in., 5/8 in. thick panels, spaced 24 in. OC. Second layer- 1-5/8 in. long for 1/2 in., 5/8 in. thick panels, spaced 24 in. OC. Third layer- 2-1/4 in. long for 1/2 in. thick panels or 2-5/8 in. long for 5/8 in. thick panels, spaced 24 in. OC. Fourth layer- 2-5/8 in. long for 1/2 in. thick panels or 3 in. long for 5/8 in. thick panels, spaced 12 in. OC. Screws offset min 6 in. from layer below.

6. Furring Channels -- (Optional, not shown, for single or double layer systems) -- Resilient furring channels fabricated from min 25 MSG corrosion-protected steel, spaced vertically a max of 24 in. OC. Flange portion attached to each intersecting stud with 1/2 in. long Type S-12 steel screws. Not for use with Item 4A.

6A. Steel Framing Members (Not Shown)* -- (Optional on one or both sides, not shown, for single or double layer systems) -- As an alternate to Item 6, furring channels and Steel Framing Members as described below:
a. Furring Channels -- Formed of No. 25 MSG galv steel. 2-3/8 in. wide by 7/8 in. deep, spaced max. 24 in. OC perpendicular to studs. Channels secured to studs as described in Item b. Gypsum board attached to furring channels as described in Item 5. Not for use with Item 4A.
b. Steel Framing Members* -- Used to attach furring channels (Item 6Aa) to studs (Item 2). Clips spaced max. 48 in. OC., and secured to studs with No. 8 x 1-1/2 in. minimum self-drilling, S-12 steel screw through the center grommet. Furring channels are friction fitted into clips.

PAC INTERNATIONAL INC -- Type RSIC-1.

6B. Steel Framing Members (Optional, Not Shown)* -- As an alternate to Item 6, furring channels and Steel Framing Members on only one side of studs as described below:
a. Furring Channels -- Formed of No. 25 MSG galv steel, spaced 24 in. OC perpendicular to studs. Channels secured to studs as described in Item b. Batts and Blankets placed in stud cavity as described in Item 4. Two layers of gypsum board attached to furring channels as described in Item 4. Not for use with Item 4A.
b. Steel Framing Members* -- Used to attach furring channels (Item 6Ba) to one side of studs (Item 2) only. Clips spaced 48 in. OC., and secured to studs with two No. 8 x 2-1/2 in. coarse drywall screws, one through the hole at each end of the clip. Furring channels are friction fitted into clips.

KINETICS NOISE CONTROL INC -- Type Isomax

7. Joint Tape and Compound -- Vinyl or casein, dry or premixed joint compound applied in two coats to joints and screw heads of outer layers. Paper tape, nom 2 in. wide, embedded in first layer of compound over all joints of outer layer panels. Paper tape and joint compound may be omitted when gypsum panels are supplied with a square edge.

8. Siding, Brick or Stucco -- (Optional, not shown) -- Aluminum, vinyl or steel siding, brick veneer or stucco, meeting the requirements of local code agencies, installed over gypsum panels. Brick veneer attached to studs with corrugated metal wall ties attached to each stud with steel screws, not more than each sixth course of brick.

9. Caulking and Sealants* -- (Optional, not shown) -- A bead of acoustical sealant applied around the partition perimeter for sound control.

UNITED STATES GYPSUM CO -- Type AS

*Bearing the UL Classification Mark

UL DESIGN U419
1 1/2" = 1'-0"

GENERAL PARTITION NOTES

APPLIED FINISH MATERIALS

APPLIED FINISHES INCLUDE, BUT ARE NOT LIMITED TO:
PAINT, VENEER PLASTER, WALL COVERINGS, RESINOUS COATINGS, ACOUSTICAL WALL PANELS, WOOD MILLWORK TRIM, AND WOOD WALL PANELS.

GENERALLY, WALL TYPES DO NOT INCLUDE OR SHOW ANY APPLIED FINISHES; (WALL TYPES WITH WOOD PANEL AND/OR OTHER VENEERS MAY BE CREATED). SEE FINISH SCHEDULE AND INTERIOR ELEVATIONS FOR MATERIALS TO BE INSTALLED OVER THE BASIC PARTITION ASSEMBLY.

THE CONTRACTOR SHALL COORDINATE DIMENSIONAL LAYOUT WITH APPLIED FINISH THICKNESS WHERE CLEAR OR MINIMUM CLEAR DIMENSIONS ARE REQUIRED

THE CONTRACTOR SHALL COORDINATE ANY ADDITIONAL REQUIREMENTS WITHIN WALL FRAMING NECESSARY FOR APPLIED FINISH MATERIALS.

FIRE-RATED & SMOKE-RATED WALLS

FIRE/SMOKE SEALANTS AND/OR FIRE SAFING IS REQUIRED AT RATED PARTITIONS WHERE THE PARTITION JAMB CONDITIONS INTERFACE WITH DISSIMILAR MATERIALS OR WHERE FIRE TAPING AT THE INTERFACE OF MATERIALS IS NOT POSSIBLE.

FIRE SEALANTS ARE NOT REQUIRED AT THE BASE/SILL CONDITION OF PARTITIONS.

WHERE A FIRE-RATED PARTITION IS ALSO NOTED TO HAVE ACOUSTICAL ELEMENTS, FIRE SEALANTS AND/OR FIRE SAFING SHALL BE PROVIDED IN LIEU OF ACOUSTICAL SEALANTS. ACOUSTICAL SEALANT SHALL BE PROVIDED AT THE BASE/SILL OF PARTITIONS.

UNIT MASONRY

WALLS SHALL BE ALYED OUT IN ADVACE FOR ACCURATE SPACING OF THE UNITS WITH UNIFORM JOINT WIDTHS AND FOR ACCURATE LOCATING OF OPENINGS, CONTROL JOINTS, ETC. THE USE OF UNITS CUT TO LESS-THAN-HALF-SIZE SHALL BE AVOIDED WHERE POSSIBLE.

THE CONTRACTOR SHALL COORDINATE OPENINGS AND RECESSES WITH MASONRY WALLS TO ACCOMMODATE ANY EQUIPMENT OR ITEMS SPECIFIED BY THE DRAWINGS OR IN THE SPECIFICATIONS.

COORDINATE INSTALLATION OF ELECTRICAL AND/OR PLUMBING ITEMS TO BE IMBEDDED IN MASONRY WALLS WITH ELEC. AND PLUMB. DRAWINGS.

GYPSUM BOARD

GYPSUM BOARD IS TYPICALLY 5/8" TYPE 'X', UNLESS NOTED OTHERWISE.

PROVIDE MOISTURE-RESISTANT OR CEMENTITOUS BOARDS WHERE REQUIRED IN GYPSUM BOARD SPECIFICATION 092900 AND WHERE NOTED IN THE DRAWINGS.

PROVIDE IMPACT-RESISTANT BOARDS WHERE REQUIRED IN THE GYPSUM BOARD SPECIFICATION 092900 AND WHERE NOTED IN THE DRAWINGS.

PARTITION DESIGNATIONS

WALL VARIANT
SPECIFIC VARIANT (1, 2, 3... ETC.)

WALL MATERIAL
CONCRETE - C
GYP. BOARD ON METAL STUDS - G
CONC. MASONRY (CMU) - M
GYP. BOARD ON SHAFTWALL - S

WALL CORE THICKNESS
THICKNESS PER WALL TYPE
EXAMPLES: 3 = 3-5/8" STUD

3G2 / X-#

3G2 / X-#

PARTITION TAG

HEAD CONSTRUCTION
A - EXTEND TO 6" ABOVE CEILING HEIGHT.
B - FULL-HEIGHT WALL, EXTEND TO DECK OR BEAM ABOVE.
C - FULL-HEIGHT WALL, FRAMED WITH COLD-FORMED METAL STUDS PER SPEC. 054000.
P - PARTIAL-HEIGHT WALL. HEIGHT AS NOTED ON PLAN OR ON DETAIL.
R - FULL-HEIGHT, FIRE-RATED WALL, SEALED TO STRUC. ABOVE PER FIRE ASSEMBLY.
S - SPECIAL HEAD CONDITION, PER DETAIL.

WALL ADDITIONS (WHERE APPLICABLE)
1 - ACOUSTIC ASSEMBLY W/ BATT INSULATION & SEALANT.
2 - THERMAL INSULATION, FULL-DEPTH OF STUD CAVITY U.N.O.
3 - SMOKE PARTITION, SEAL WALL PERIMETER & PENETRATIONS.
4 - SPECIAL TREATMENT, PER NOTES.

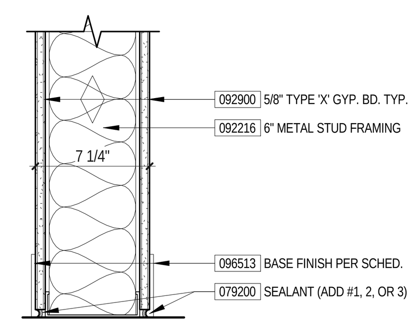

6G2
6G2 / R RATED 1-HR PER UL-U419

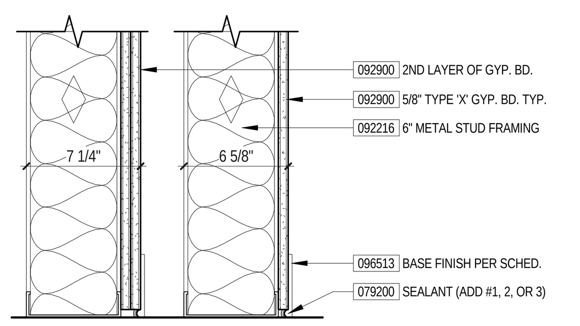

6G1A 6G1

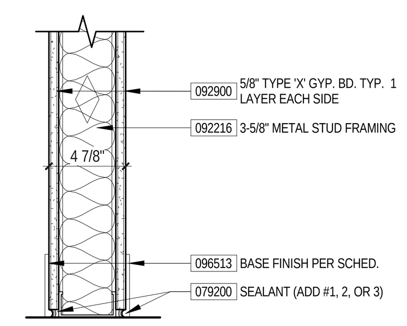

3G2
3G2 / R RATED 1-HR PER UL-U419

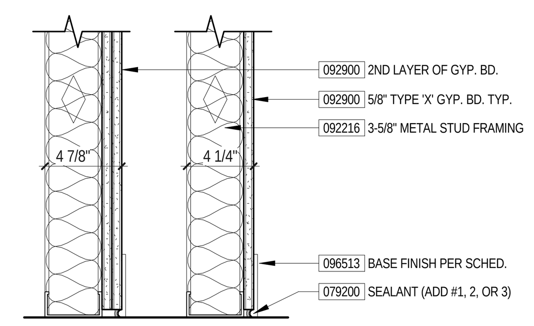

3G1A 3G1

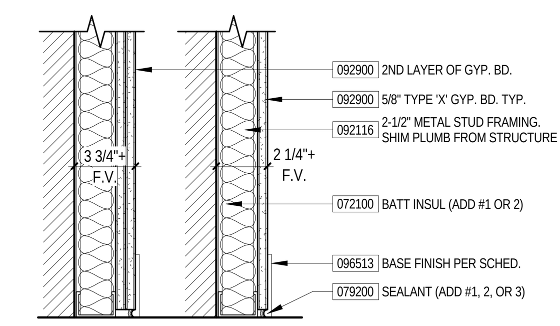

2G1A 2G1

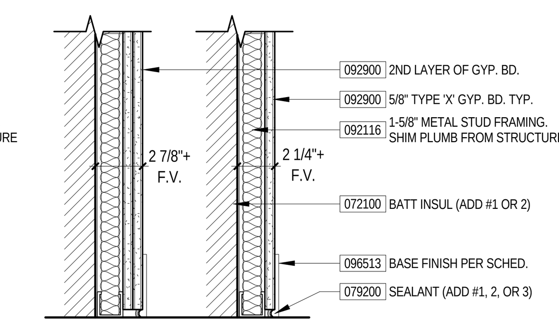

1G1A 1G1

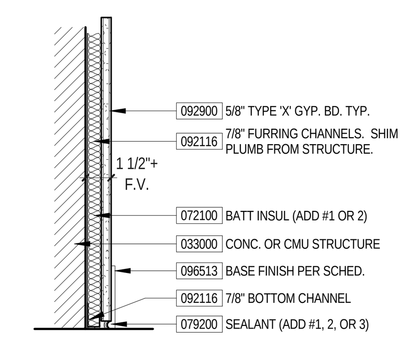

0G1

'G' PARTITIONS

TYP. PARTITIONS & INTERIOR DETAILS - CHILDRENS
1 1/2" = 1'-0"

PGAV ARCHITECTS
PECKHAM GUYTON ALBERS & VIETS, INC.
1900 W.47th Place, #300, Westwood, KS 66205
(913) 362-6500 www.PGAV.COM
Copyright ©2019

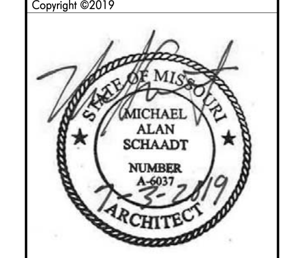

THE SEAL AND SIGNATURE APPLY ONLY TO THE DOCUMENT TO WHICH THEY ARE AFFIXED, AND EXPRESSLY DISCLAIM ANY RESPONSIBILITY FOR ALL OTHER PLANS, SPECIFICATIONS, ESTIMATES, REPORTS, OR OTHER DOCUMENTS OR INSTRUMENTS RELATING TO OR INTENDED TO BE USED FOR ANY PART OR PARTS OF THE ARCHITECTURAL OR ENGINEERING PROJECT.

bgr CONSULTING ENGINEERS

#	DATE	DESCRIPTION

USKC EARLY CHILDHOOD EXHIBITS

SCIENCE CITY @ UNION STATION
30 W. PERSHING RD
KANSAS CITY, MO 64108

CONSTRUCTION DOCUMENTS

Original Size: 1 1/2" Drawing may have been reduced.
0" 1"

TYPICAL PARTITIONS

DATE: 07/03/19
DRAWN: PGAV CHECKED: PGAV
PGAV #: 53494-00 CLIENT #:
SHEET #: A115

PGAV
C:\Users\chris.busch\Desktop\53494-00_USKC_Childrens-Exhibits_cbusch(Recovery).rvt
7/3/2019 2:29:43 PM

DEMO LEGEND

- DEMO 2X4 CEILING
- DEMO 2X2 CEILING
- DEMO GYP CEILING
- DEMO EXISTING CONCRETE SLAB
- DEMO WALL, FV WALL CONSTRUCTION
- DEMO DOOR

GENERAL DEMO PLAN NOTES

1. PROVIDE TEMPORARY PROTECTION OF ALL EXISTING CONSTRUCTION TO REMAIN. INSTALL TEMPORARY CONSTRUCTION BARRIERS AS REQUIRED TO CREATE A SECURE ENCLOSURE TO SEPARATE DEMOLITION AND CONSTRUCTION ACTIVITIES FROM OCCUPIED SPACES.

2. CONTRACTOR SHALL FIELD VERIFY EXISTING CONDITIONS PRIOR TO BEGINNING WORK. REPORT ANY DISCREPANCIES TO ARCHITECT IN WRITING PRIOR TO BEGINNING WORK IN THE AFFECTED AREAS. DIMENSIONS PROVIDED ARE FOR REFERENCE ONLY AND SHALL BE CONFIRMED IN THE FIELD.

3. CONTRACTOR SHALL PROVIDE PHOTO DOCUMENTATION OF EXISTING CONDITIONS TO REMAIN, NOTING SPECIFICALLY ALL MATERIALS OR ITEMS WHICH ARE DAMAGED PRIOR TO BEGINNING WORK.

4. REFER TO MEP/FP DRAWINGS FOR ADDITIONAL DEMOLITION WORK. ALL ABANDONED SYSTEMS WITHIN PROJECT AREA SHALL BE REMOVED UNLESS SPECIFICALLY NOTED OTHERWISE. CAP ALL DISCONNECTED MECHANICAL PIPING LINES WITHIN THE WALL OR BELOW THE FLOOR. REPAIR WALL, FLOOR, AND CEILING PENETRATIONS RESULTING FROM REMOVAL OR REROUTING OF NEW AND/OR EXISTING PIPING, DUCTWORK, CONDUIT, ETC. AS REQUIRED TO BLEND SEAMLESSLY WITH ADJACENT FINISHES.

5. ALL SYSTEMS SERVING OCCUPIED SPACES SHALL BE MAINTAINED, UNLESS OTHERWISECOORDINATED WITH OWNER. WHERE DEMOLITION DISRUPTS OR DISTURBS EXISITNG ELECTRICAL, MECHANICAL OR PLUMBING SERVICES TO OCCUPIED AREAS OUTSIDE THE RENOVATION AREA, CONTRACTOR SHALL PROVIDE TEMPORARY CONNECTIONS AS REQUIRED TO ENSURE UNINTERRUPTED SERVICE.

6. CONTRACTOR SHALL REMOVE COMPLETELY EXISTING CONSTRUCTION WHICH CONFLICTS WITH NEW CONSTRUCTION.

7. WHERE NEW FLOOR FINISHES ARE TO BE INSTALLED, CONTRACTOR SHALL REMOVE EXISTING FLOOR FINISHES AND ADHESIVES AND PREPARE SLAB TO RECEIVE NEW FLOOR FINISHES, PATCHING HOLES AS REQUIRED. SEE SPECIFICATIONS FOR ADDITIONAL FLOOR PREP REQUIREMENTS.

8. EXISTING WALL CONSTRUCTION VARIES THROUGHOUT PROJECT AREA (CONCRETE, CMU, GYP ON METAL STUD, ETC.). REVIEW EXISTING WALLS INDICATED TO BE DEMOLISHED ON SITE PRIOR TO PREPARING BIDS. WHERE NEW WORK REQUIRES PATCHING EXISTING WALLS, PATCH USING MATERIALS MATCHING EXISTING CONSTRUCTION.

9. CONTRACTOR SHALL PATCH TO MATCH SURROUNDING FINISHES, ANY AREAS DAMAGED AS A RESULT OF, OR CAUSED BY, THE WORK INDICATED THROUGHOUT THE CONTRACT DOCUMENTS. EXISTING CEILING TILE AND GRID BEING REMOVED AND RE-INSTALLED AS PART OF THIS PROJECT SHALL BE REPLACED WITH NEW IF DAMAGED.

10. GENERAL CONTRACTOR SHALL BE RESPONSIBLE FOR KEEPING AREAS OUTSIDE OF THE CONSTRUCTION LIMITS CLEAN AND FREE OF DUST AT ALL TIMES.

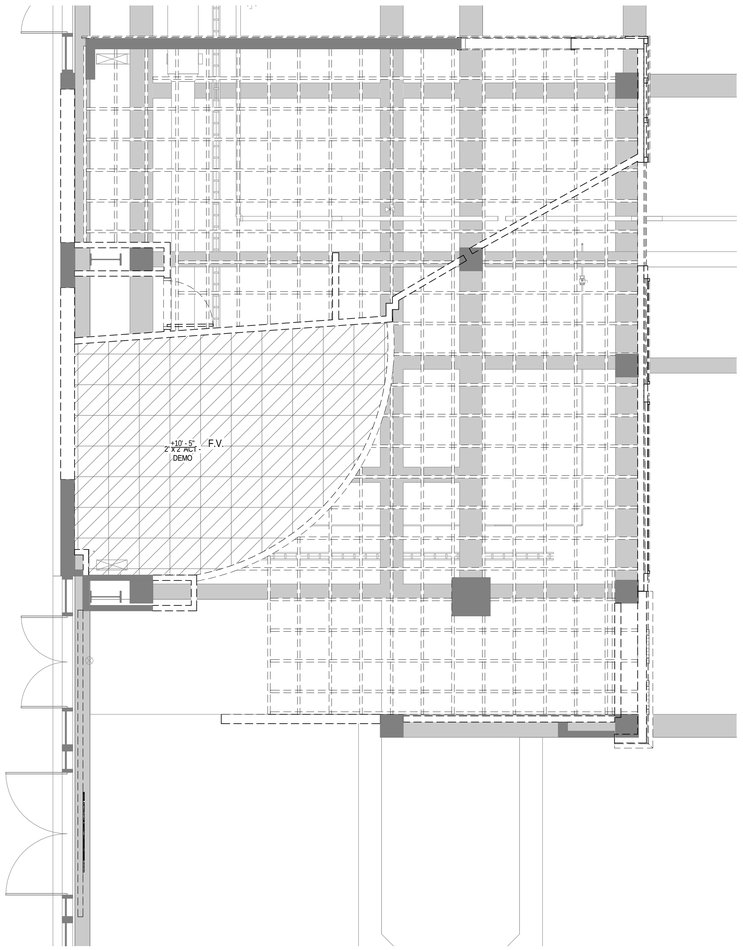

DEMO RCP - CREATIVE CORNER **A4**
1/4" = 1'-0"

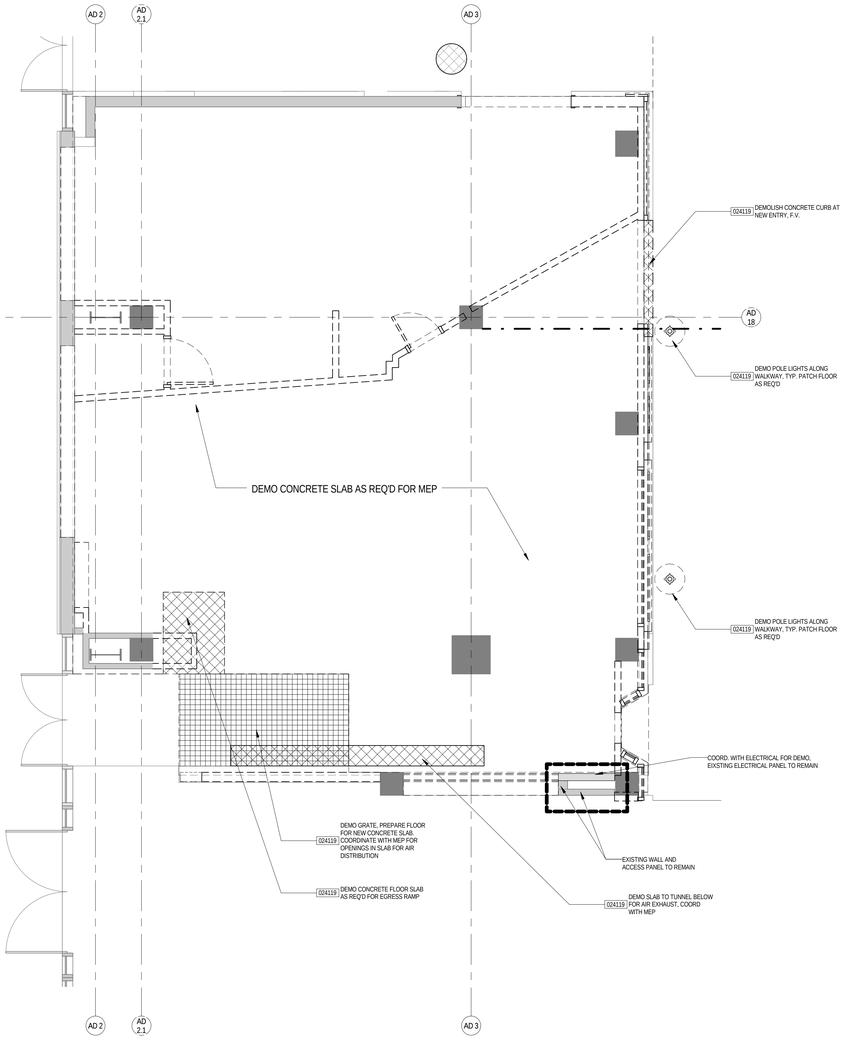

DEMO PLAN - CREATIVE CORNER **A1**
1/4" = 1'-0"

PGAV ARCHITECTS
PECKHAM GUYTON ALBERS & VIETS, INC.
1900 W 47th Place, #300, Westwood, KS 66205
(913) 362-6500
www.PGAV.COM

Copyright ©2019

STATE OF MISSOURI
MICHAEL ALAN SCHAADT
NUMBER A-6073
ARCHITECT

THE SEAL AND SIGNATURE APPLY ONLY TO THE DOCUMENT TO WHICH THEY ARE AFFIXED AND DO NOT EXTEND TO ANY OTHER RESPONSIBILITY FOR ALL OTHER PLANS, SPECIFICATIONS, ESTIMATES, REPORTS, OR OTHER DOCUMENTS OR INSTRUMENTS RELATED TO THE PROJECT, EXCEPT FOR THE SPECIFIC PARTS OF THE ARCHITECTURAL OR ENGINEERING PROJECT.

bgr CONSULTING ENGINEERS

#	DATE	DESCRIPTION

USKC EARLY CHILDHOOD EXHIBITS

SCIENCE CITY @ UNION STATION
30 W. PERSHING RD
KANSAS CITY, MO 64108

CONSTRUCTION DOCUMENTS

Original Size: 1 1/2" Drawing may have been reduced.
0" 1"

DEMO PLANS - CREATIVE CORNER

DATE: 07/03/19
DRAWN: PGAV
CHECKED: PGAV
PGAV #: 53494-00
CLIENT #:
SHEET #: A210

7/3/2019 2:29:46 PM C:\Users\chris.bush\Desktop\53494-00_USKC_Childrens-Exhibits_chrisH(Recovery).rvt

DEMO LEGEND

- DEMO 2X4 CEILING
- DEMO 2X2 CEILING
- DEMO GYP CEILING
- DEMO EXISTING CONCRETE SLAB
- DEMO WALL, FV WALL CONSTRUCTION
- DEMO DOOR

GENERAL DEMO PLAN NOTES

1. PROVIDE TEMPORARY PROTECTION OF ALL EXISTING CONSTRUCTION TO REMAIN. INSTALL TEMPORARY CONSTRUCTION BARRIERS AS REQUIRED TO CREATE A SECURE ENCLOSURE TO SEPARATE DEMOLITION AND CONSTRUCTION ACTIVITIES FROM OCCUPIED SPACES.

2. CONTRACTOR SHALL FIELD VERIFY EXISTING CONDITIONS PRIOR TO BEGINNING WORK. REPORT ANY DISCREPANCIES TO ARCHITECT IN WRITING PRIOR TO BEGINNING WORK IN THE AFFECTED AREAS. DIMENSIONS PROVIDED ARE FOR REFERENCE ONLY AND SHALL BE CONFIRMED IN THE FIELD.

3. CONTRACTOR SHALL PROVIDE PHOTO DOCUMENTATION OF EXISTING CONDITIONS TO REMAIN, NOTING SPECIFICALLY ALL MATERIALS OR ITEMS WHICH ARE DAMAGED PRIOR TO BEGINNING WORK.

4. REFER TO MEP/FP DRAWINGS FOR ADDITIONAL DEMOLITION WORK. ALL ABANDONED SYSTEMS WITHIN PROJECT AREA SHALL BE REMOVED UNLESS SPECIFICALLY NOTED OTHERWISE. CAP ALL DISCONNECTED MECHANICAL PIPING LINES WITHIN THE WALL OR BELOW THE FLOOR. REPAIR WALL, FLOOR, AND CEILING PENETRATIONS RESULTING FROM REMOVAL OR REROUTING OF NEW AND/OR EXISTING PIPING, DUCTWORK, CONDUIT, ETC. AS REQUIRED TO BLEND SEAMLESSLY WITH ADJACENT FINISHES.

5. ALL SYSTEMS SERVING OCCUPIED SPACES SHALL BE MAINTAINED, UNLESS OTHERWISECOORDINATED WITH OWNER. WHERE DEMOLITION DISRUPTS OR DISTURBS EXISITING ELECTRICAL, MECHANICAL OR PLUMBING SERVICES TO OCCUPIED AREAS OUTSIDE THE RENOVATION AREA, CONTRACTOR SHALL PROVIDE TEMPORARY CONNECTIONS AS REQUIRED TO ENSURE UNINTERRUPTED SERVICE.

6. CONTRACTOR SHALL REMOVE COMPLETELY EXISTING CONSTRUCTION WHICH CONFLICTS WITH NEW CONSTRUCTION.

7. WHERE NEW FLOOR FINISHES ARE TO BE INSTALLED, CONTRACTOR SHALL REMOVE EXISTING FLOOR FINISHES AND ADHESIVES AND PREPARE SLAB TO RECEIVE NEW FLOOR FINISHES, PATCHING HOLES AS REQUIRED. SEE SPECIFICATIONS FOR ADDITIONAL FLOOR PREP REQUIREMENTS.

8. EXISTING WALL CONSTRUCTION VARIES THROUGHOUT PROJECT AREA (CONCRETE, CMU, GYP ON METAL STUD, ETC.). REVIEW EXISTING WALLS INDICATED TO BE DEMOLISHED ON SITE PRIOR TO PREPARING BIDS. WHERE NEW WORK REQUIRES PATCHING EXISTING WALLS, PATCH USING MATERIALS MATCHING EXISTING CONSTRUCTION.

9. CONTRACTOR SHALL PATCH TO MATCH SURROUNDING FINISHES, ANY AREAS DAMAGED AS A RESULT OF, OR CAUSED BY, THE WORK INDICATED THROUGHOUT THE CONTRACT DOCUMENTS. EXISTING CEILING TILE AND GRID BEING REMOVED AND RE-INSTALLED AS PART OF THIS PROJECT SHALL BE REPLACED WITH NEW IF DAMAGED.

10. GENERAL CONTRACTOR SHALL BE RESPONSIBLE FOR KEEPING AREAS OUTSIDE OF THE CONSTRUCTION LIMITS CLEAN AND FREE OF DUST AT ALL TIMES.

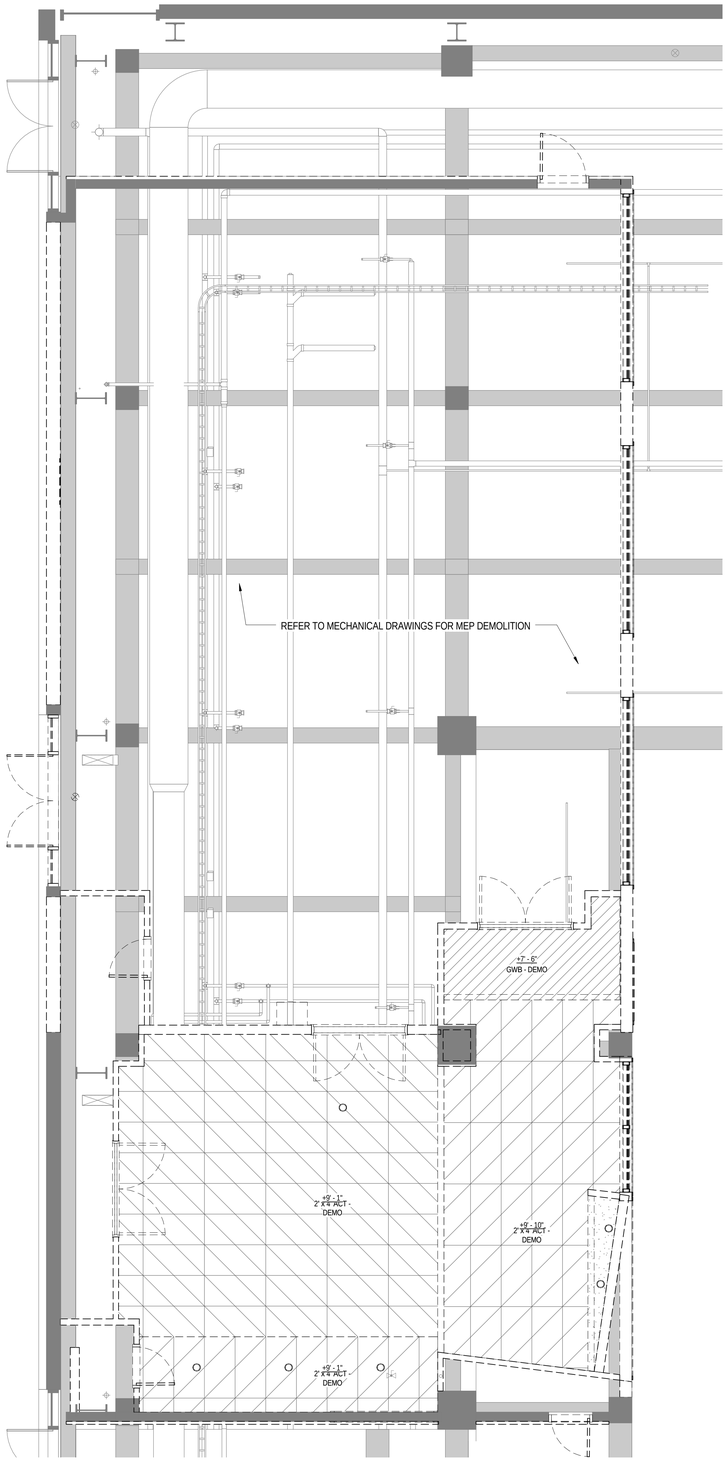

DEMO RCP - LET'S PLAY **A4**
1/4" = 1'-0"

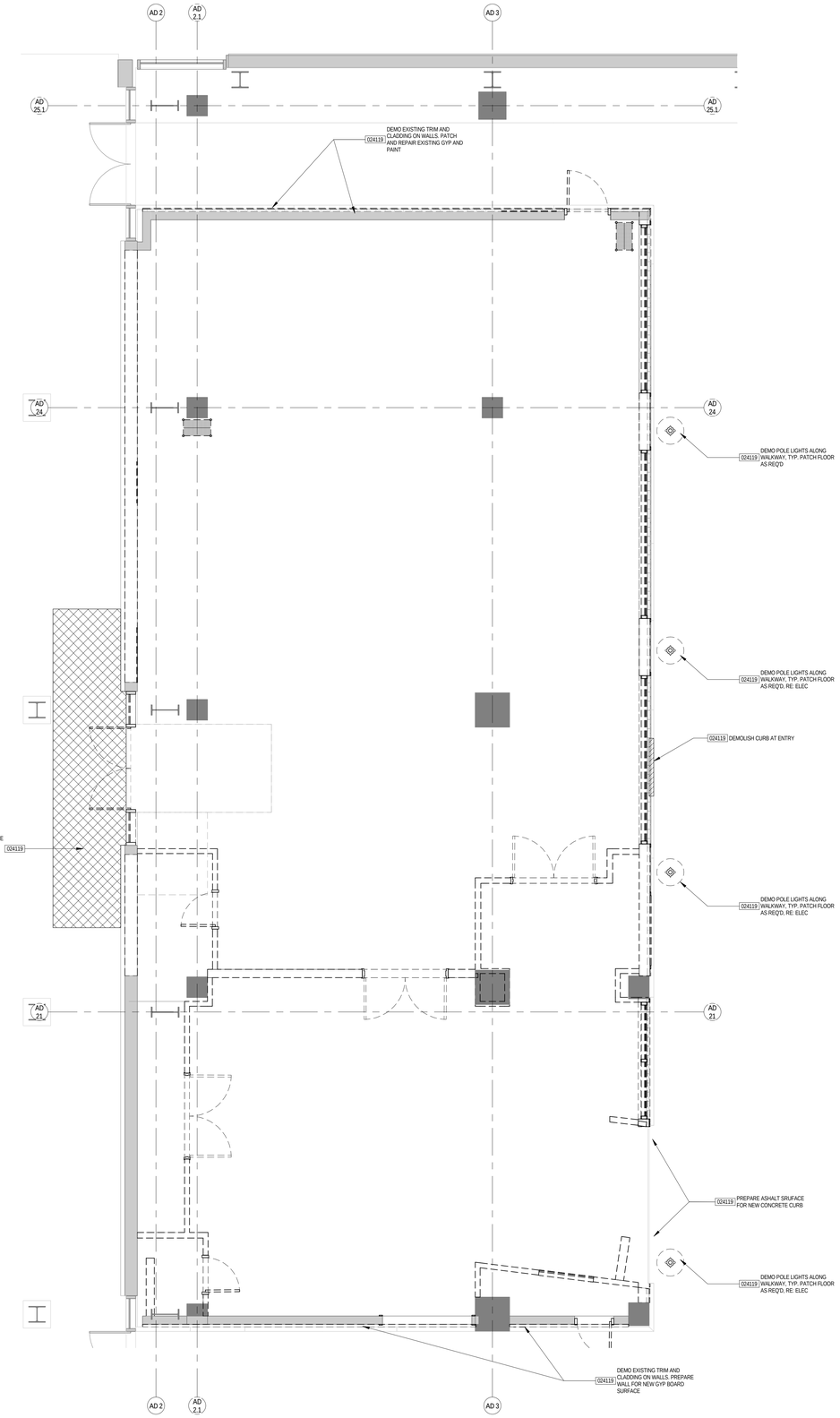

DEMO PLAN - LET'S PLAY **A1**
1/4" = 1'-0"

PGAV ARCHITECTS
PECKHAM GUYTON ALBERS & VIETS, INC.
1900 W 47th Place, #300, Westwood, KS 66205
(913) 362-6500
www.PGAV.COM
Copyright ©2019

STATE OF MISSOURI
MICHAEL ALAN SCHAADT
NUMBER A-6073
ARCHITECT

THE SEAL AND SIGNATURE APPLY ONLY TO THE DOCUMENT TO WHICH THEY ARE AFFIXED AND DO NOT EXTEND TO ANY REVISIONS RESPONSIBILITY FOR ALL OTHER PLANS, SPECIFICATIONS, ESTIMATES, REPORTS, OR OTHER DOCUMENTS OR INSTRUMENTS RELATIVE TO OR DELIVERED IN CONNECTION WITH THE PREPARATION OF THE ARCHITECTURAL OR ENGINEERING PROJECT.

bgr CONSULTING ENGINEERS

#	DATE	DESCRIPTION

USKC EARLY CHILDHOOD EXHIBITS

SCIENCE CITY @ UNION STATION
30 W. PERSHING RD
KANSAS CITY, MO 64108

CONSTRUCTION DOCUMENTS

Original Size: 1 1/2" Drawing may have been reduced.

DEMO PLANS - LET'S PLAY

DATE: 07/03/19
DRAWN: PGAV
CHECKED: PGAV
PGAV #: S3494-00
CLIENT #:
SHEET #: A211

7/2/2019 2:29:48 PM C:\Users\chris.busch\Desktop\S3494-00_USKC_Children's-Exhibits_cbusch\Revitcentral.rvt

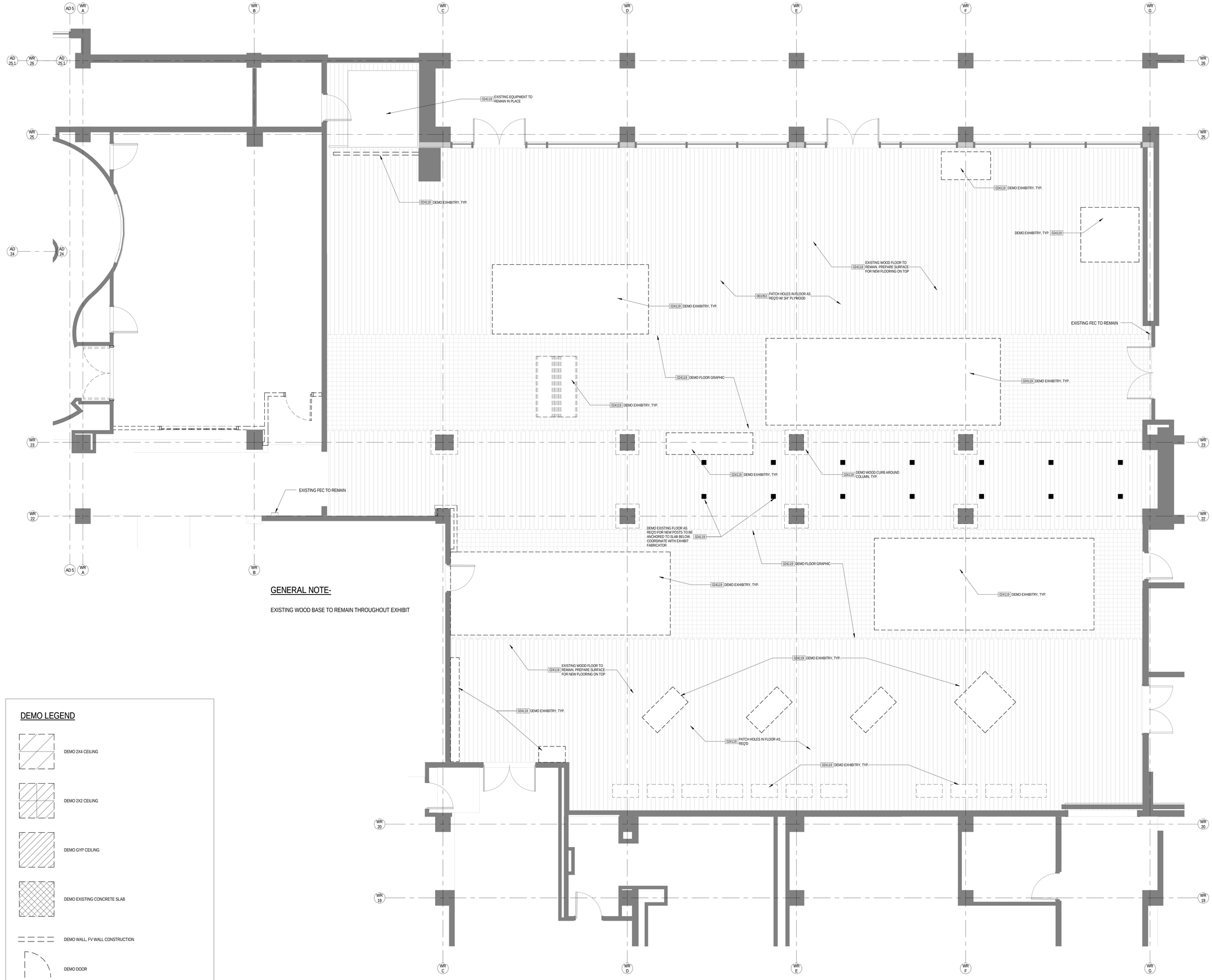

GENERAL NOTE-

EXISTING WOOD BASE TO REMAIN THROUGHOUT EXHIBIT

DEMO LEGEND

- DEMO 2X4 CEILING
- DEMO 2X2 CEILING
- DEMO GYP CEILING
- DEMO EXISTING CONCRETE SLAB
- DEMO WALL, FV WALL CONSTRUCTION
- DEMO DOOR

ALL ABOARD - DEMO PLAN **A1**
1/4" = 1'-0"

PGAV ARCHITECTS
PECKHAM GUYTON ALBERS & VIETS, INC.
1900 W 47th Place, #300, Westwood, KS 66205
(913) 362-6500 www.PGAV.COM

Copyright ©2019

STATE OF MISSOURI
MICHAEL ALAN SCHAADT
NUMBER A-6037
ARCHITECT

THE SEAL AND SIGNATURE APPLY ONLY TO THE DOCUMENT TO WHICH THEY ARE AFFIXED AND SHALL NOT BE RESPONSIBLE FOR ALL OTHER PLANS, SPECIFICATIONS, ESTIMATES, REPORTS, OR OTHER DOCUMENTS OR INSTRUMENTS RELATING TO OR INTENDED TO BE USED FOR ANY PART OR PARTS OF THE ARCHITECTURAL OR ENGINEERING PROJECT.

bgr CONSULTING ENGINEERS

#	DATE	DESCRIPTION

USKC EARLY CHILDHOOD EXHIBITS

SCIENCE CITY @ UNION STATION
30 W. PERSHING RD
KANSAS CITY, MO 64108

CONSTRUCTION DOCUMENTS

Original Size: 1 1/2" Drawing may have been reduced.
0" 1"

DEMO PLAN - ALL ABOARD

DATE: 07/03/19
DRAWN: PGAV
CHECKED: PGAV
PGAV #: 53494-00
CLIENT #:
SHEET #: A220

C:\Users\chris.busch\Desktop\53494-00_USKC_Childrens-Exhibits_cbusch(Recovery).rvt
7/3/2019 2:29:51 PM

GENERAL NOTES - LET'S PLAY

COORDINATE ALL DRAWINGS WITH CONTROL DOCUMENTS FROM BOSTON CHILDREN'S MUSEUM (BCM)

FINAL WALL, DOOR, AND WINDOW LOCATIONS/DIMENSIONS REFERENCE ARCHITECTURAL DRAWINGS UNLESS NOTED OTHERWISE.

REFERENCE DOOR DETAILS ON ARCHITECTURAL SET FOR STRUCTURAL REQUIREMENTS AT GATES.

REFERENCE CONTROL DOCUMENTS FROM BCM FOR DETAILING AND HARDWARE.

DIMENSIONS SHOWN FROM FACE OF WALL SURFACE ON PLAN.
FOR WOOD WALL CAP DIMENSIONS SEE TYP. WALL SECTIONS AND DETAILS.

SEE INTERIOR ELEVATIONS FOR WALL HEIGHTS, WALL MATERIALS AND WOOD WALL CAP LOCATIONS.

LET'S PLAY EXHIBIT MILLWORK LEGEND BY GC

#	DESCRIPTION	LOCATION	DETAIL #	BCM REF
1	BENCH B7	GROSS MOTOR	1/A819	EX 7.04
2	BENCH B6	GROSS MOTOR	2/A819	EX 7.03
3	BENCH B2	AIR PLAY	3/A819	EX 7.01
4	BENCH B8	AIR PLAY	4/A819	EX 7.04
5	BENCH B3	ENTRY	5/A819	EX 7.02
6	BENCH B5 - STORAGE BENCH	PRETEND PLAY	6/A819	EX 7.03
7	BENCH B1	PRETEND PLAY	7/A819	EX 7.01
8	TRASH AND RECYCLING CABINET	ENTRY	8/A819	EX 1.04
9	SHOE SHELF	BABYSCAPE	9/A819	EX 2.05
10	BENCH B4 - STORAGE BENCH	BABYSCAPE	10/A819	EX 7.03
11	FISH TANK	BABYSCAPE	11/A819	EX 2.06
12	FISH TANK	KITCHEN	12/A819	EX 6.03

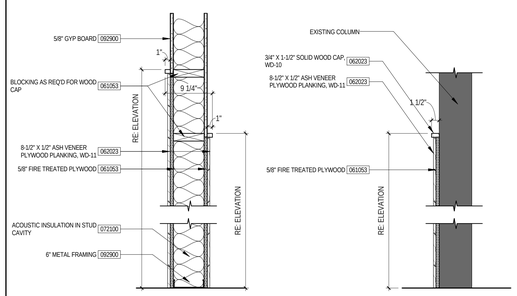

TYPE W3

TYPE W4

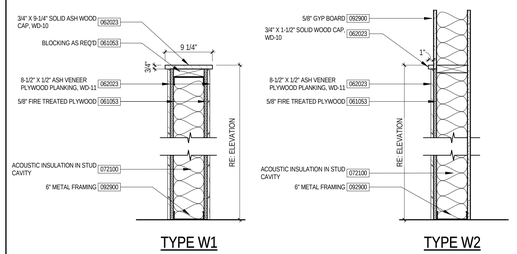

TYPE W1

TYPE W2

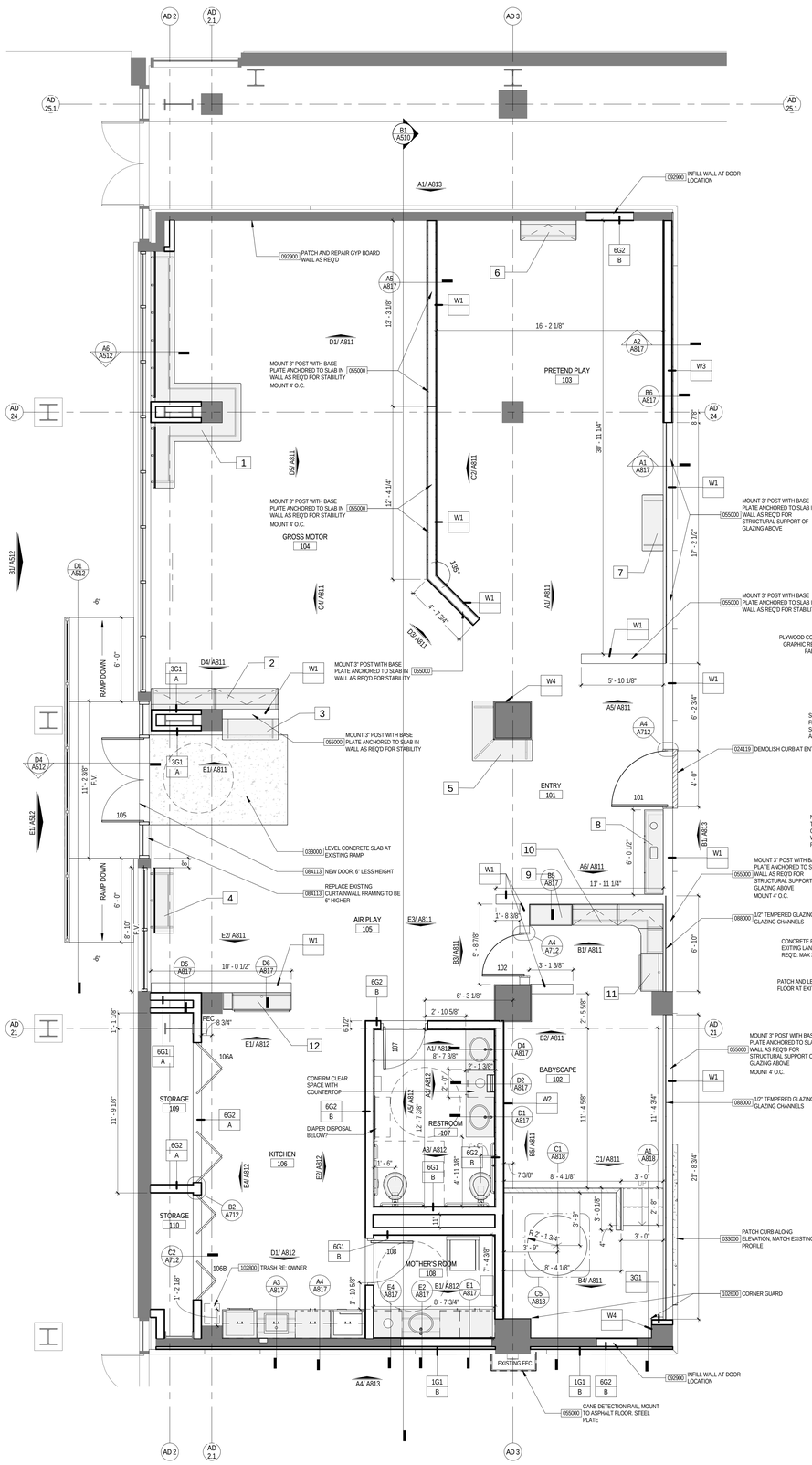

GENERAL NOTES - CREATIVE CORNER

COORDINATE ALL DRAWINGS WITH CONTROL DOCUMENTS FROM BOSTON CHILDREN'S MUSEUM (BCM)

FINAL WALL, DOOR, AND WINDOW LOCATIONS/DIMENSIONS REFERENCE ARCHITECTURAL DRAWINGS UNLESS NOTED OTHERWISE.

REFERENCE DOOR DETAILS ON ARCHITECTURAL SET DETAILING AND STRUCTURAL REQUIREMENTS

REFERENCE CONTROL DOCUMENTS FROM BCM FOR DETAILING AND HARDWARE.

SLAB WITHIN CREATIVE CORNER TO BE DEMO'D AND PATCHED AS REQ'D FOR RAMP AND MEP. COORDINATE WITH MEP

ALL EXISTING WALL TREATMENT TO BE DEMO'D AND PATCHED WITH GYP. FURROUT AS REQ'D FOR CONTINUOUS WALL SURFACE ALONG EXTERIOR OF EXHIBIT.

INTERIOR ELEVATIONS REPRESENT SCOPE OF GENERAL CONTRACTOR. REFERENCE BCM DOCUMENTS FOR EXHIBITRY

EXISTING SUPPLY GRILLE IN FLOOR TO BE DEMO'D. CONCRETE FLOOR TO BE PATCHED AS INDICATED. SEE MEP DRAWINGS FOR REROUTING OF EXHAUST.

WALL TYPES - ASH VENEER PANELS **A6**
1" = 1'-0"

LET'S PLAY FLOOR PLAN **A4**
1/4" = 1'-0"

CREATIVE CORNER FLOOR PLAN **A1**
1/4" = 1'-0"

PGAV ARCHITECTS
PECKHAM GUYTON ALBERS & VIETS, INC.
1900 W 47th Place, #300, Westwood, KS 66205
(913) 362-6500
www.PGAV.COM

Copyright ©2019

STATE OF MISSOURI
MICHAEL ALAN SCHAADT
NUMBER A-6073
ARCHITECT

THE SEAL AND SIGNATURE APPLY ONLY TO THE DOCUMENT TO WHICH IT IS AFFIXED. THE ARCHITECT ASSUMES NO RESPONSIBILITY FOR ALL OTHER PLANS, SPECIFICATIONS, ESTIMATES, REPORTS, OR OTHER DOCUMENTS OR INSTRUMENTS RELATIVE TO THE PROJECT WHICH DO NOT BEAR THE ORIGINAL SEAL OF THE ARCHITECTURAL OR ENGINEERING FIRM(S).

bgr CONSULTING ENGINEERS

#	DATE	DESCRIPTION

USKC EARLY CHILDHOOD EXHIBITS

SCIENCE CITY @ UNION STATION
30 W. PERSHING RD
KANSAS CITY, MO 64108

CONSTRUCTION DOCUMENTS

Original Size: 1 1/2" Drawing may have been reduced.
0" 1"

ENLARGED PLANS - CHILDREN'S EXHIBITS

DATE: 07/03/19
DRAWN: PGAV
CHECKED: PGAV
PGAV #: 53494-00
CLIENT #:
SHEET #: **A310**

C:\Users\chris.bush\Desktop\53494-00_USKC_Children-Exhibits_chrisnt\Recovery1.rvt
7/2/2019 2:29:57 PM

GENERAL NOTES - ALL ABOARD

COORDINATE ALL DRAWINGS WITH CONTROL DOCUMENTS FROM BOSTON CHILDREN'S MUSEUM (BCM)

FINAL WALL, DOOR, AND WINDOW LOCATIONS/DIMENSIONS REFERENCE ARCHITECTURAL DRAWINGS UNLESS NOTED OTHERWISE.

REFERENCE DOOR DETAILS ON ARCHITECTURAL SET FOR STRUCTURAL REQUIREMENTS AT GATES.

REFERENCE CONTROL DOCUMENTS FROM BCM FOR DETAILING AND HARDWARE.

DIMENSIONS SHOWN FROM FACE OF WALL SURFACE ON PLAN.
FOR WOOD WALL CAP DIMENSIONS SEE TYP. WALL SECTIONS AND DETAILS.

SEE INTERIOR ELEVATIONS FOR WALL HEIGHTS, WALL MATERIALS AND WOOD WALL CAP LOCATIONS.

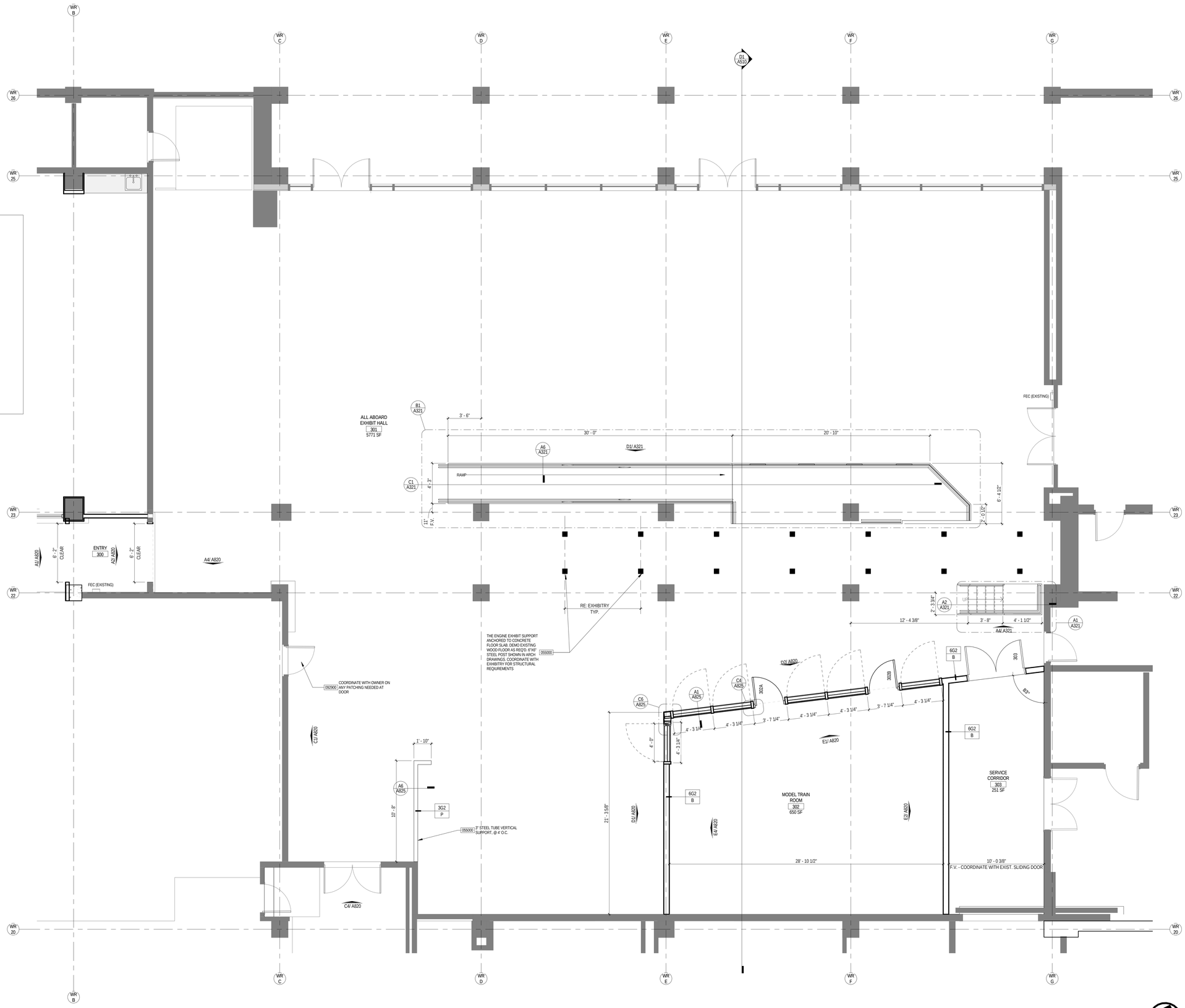

FLOOR PLAN - ALL ABOARD **A1**
1/4" = 1'-0"

PGAV ARCHITECTS
PECKHAM GUYTON ALBERS & VIETS, INC.
1900 W 47th Place, #300, Westwood, KS 66205
(913) 362-6500 www.PGAV.COM
Copyright ©2019

STATE OF MISSOURI
MICHAEL ALAN SCHAADT
NUMBER A-6037
ARCHITECT

THE SEAL AND SIGNATURE APPLY ONLY TO THE DOCUMENT TO WHICH THEY ARE AFFIXED AND EXPRESS THE SOLE AND ENTIRE RESPONSIBILITY FOR ALL OTHER PLANS, SPECIFICATIONS, ESTIMATES, REPORTS, OR OTHER DOCUMENTS OR INSTRUMENTS RELATING TO OR INTENDED TO BE USED FOR ANY PART OR PARTS OF THE ARCHITECTURAL OR ENGINEERING PROJECT.

bgr CONSULTING ENGINEERS

#	DATE	DESCRIPTION

USKC EARLY CHILDHOOD EXHIBITS

SCIENCE CITY @ UNION STATION
30 W. PERSHING RD
KANSAS CITY, MO 64108

CONSTRUCTION DOCUMENTS

Original Size: 1 1/2" Drawing may have been reduced.
0" 1"

FLOOR PLAN - ALL ABOARD

DATE: 07/03/19
DRAWN: PGAV
CHECKED: PGAV
PGAV #: 53494-00
CLIENT #:
SHEET #: A320

C:\Users\chris.busch\Desktop\53494-00_USKC_Childrens-Exhibits_cbusch(Recovery).rvt
7/3/2019 2:29:59 PM

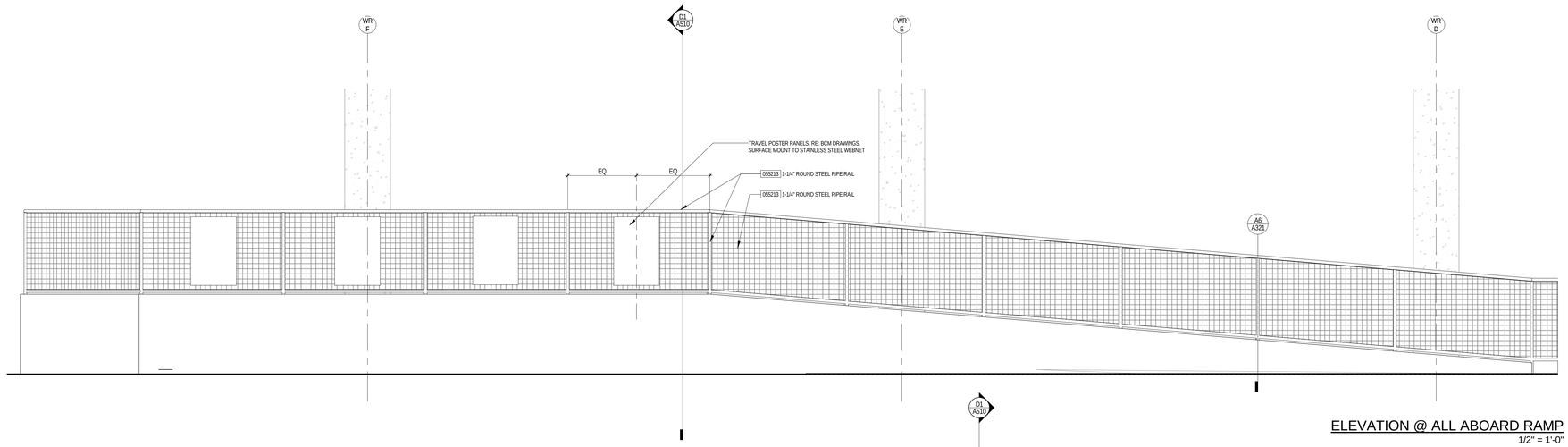

ELEVATION @ ALL ABOARD RAMP **D1**
1/2" = 1'-0"

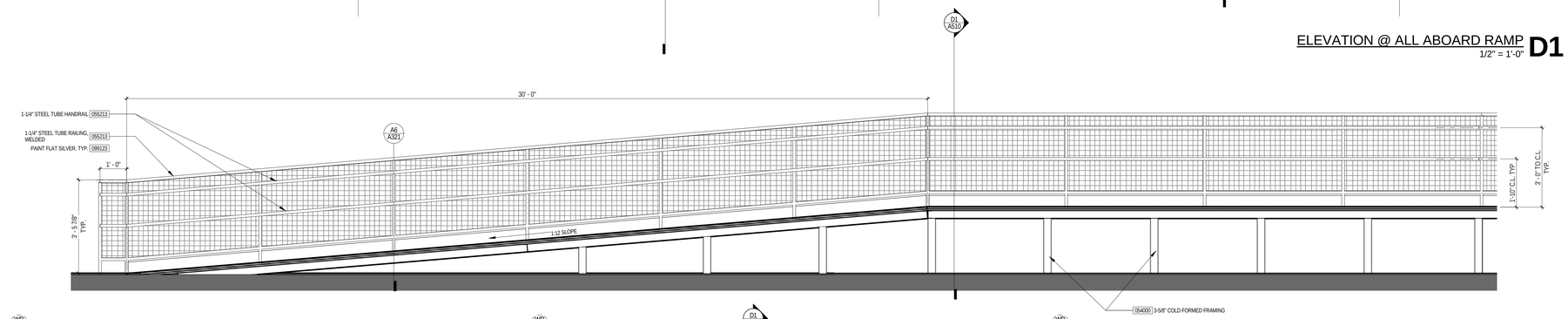

SECTION @ RAMP **C1**
1/2" = 1'-0"

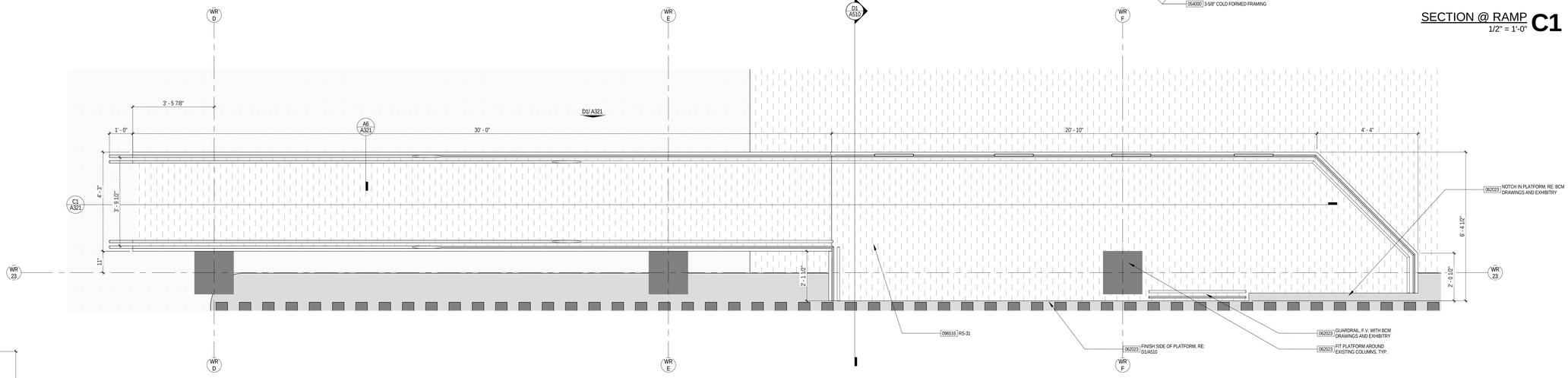

ENLARGED PLAN - RAMP ALL ABOARD **B1**
1/2" = 1'-0"

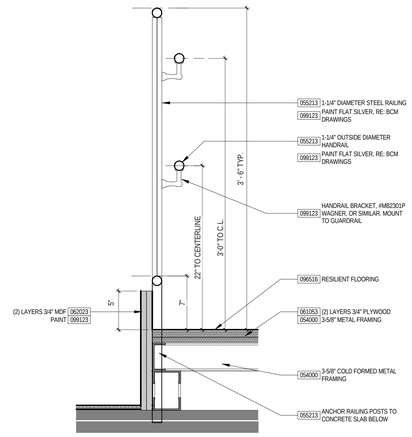

DETAIL @ ALL ABOARD RAILING, TYP. **A6**
1 1/2" = 1'-0"

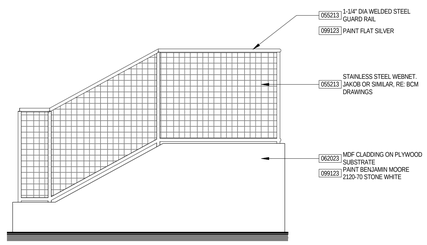

ELEVATION @ STAIR ALL ABOARD **A4**
1/2" = 1'-0"

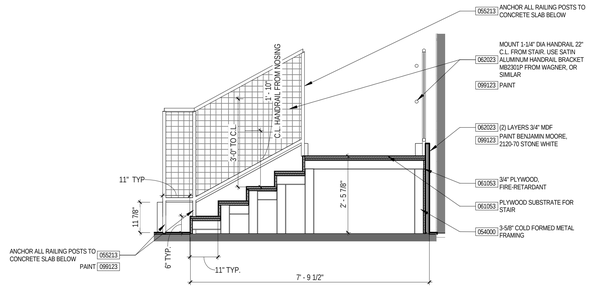

SECTION @ STAIR **A2**
1/2" = 1'-0"

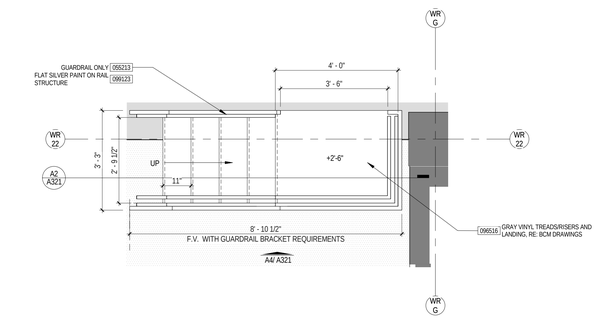

ENLARGED PLAN - STAIR ALL ABOARD **A1**
1/2" = 1'-0"

PGAV ARCHITECTS
PECKHAM GUYTON ALBERS & VIETS, INC.
1900 W 47th Place, #300, Westwood, KS 66205
(913) 362-6500 www.PGAV.COM
Copyright ©2019

STATE OF MISSOURI
MICHAEL ALAN SCHAADT
NUMBER A-6073
REGISTERED ARCHITECT

THE SEAL AND SIGNATURE APPLY ONLY TO THE DOCUMENT TO WHICH THEY ARE AFFIXED AND DO NOT EXTEND TO ANY REVISIONS MADE BY ANY OTHER PERSON TO THE DOCUMENT, ESTIMATES, REPORTS, OR OTHER DOCUMENTS OR INSTRUMENTS RELATED TO THE DOCUMENT OR TO ANY UNSEALED COPIES OF PARTS OF THE ARCHITECTURAL OR ENGINEERING PROJECT.

bgr CONSULTING ENGINEERS

#	DATE	DESCRIPTION

USKC EARLY CHILDHOOD EXHIBITS

SCIENCE CITY @ UNION STATION
30 W. PERSHING RD
KANSAS CITY, MO 64108

CONSTRUCTION DOCUMENTS

Original Size: 1 1/2" Drawing may have been reduced.
0" 1"

ENLARGED PLANS - ALL ABOARD

DATE: 07/03/19
DRAWN: PGAV | CHECKED: PGAV
PGAV # S3494-00 | CLIENT #
SHEET #: A321

C:\Users\chris.busch\Desktop\S3494-00_USKC_Children-Exhibits_cbusch(Recovery).rvt
7/2/2019 2:39:07 PM

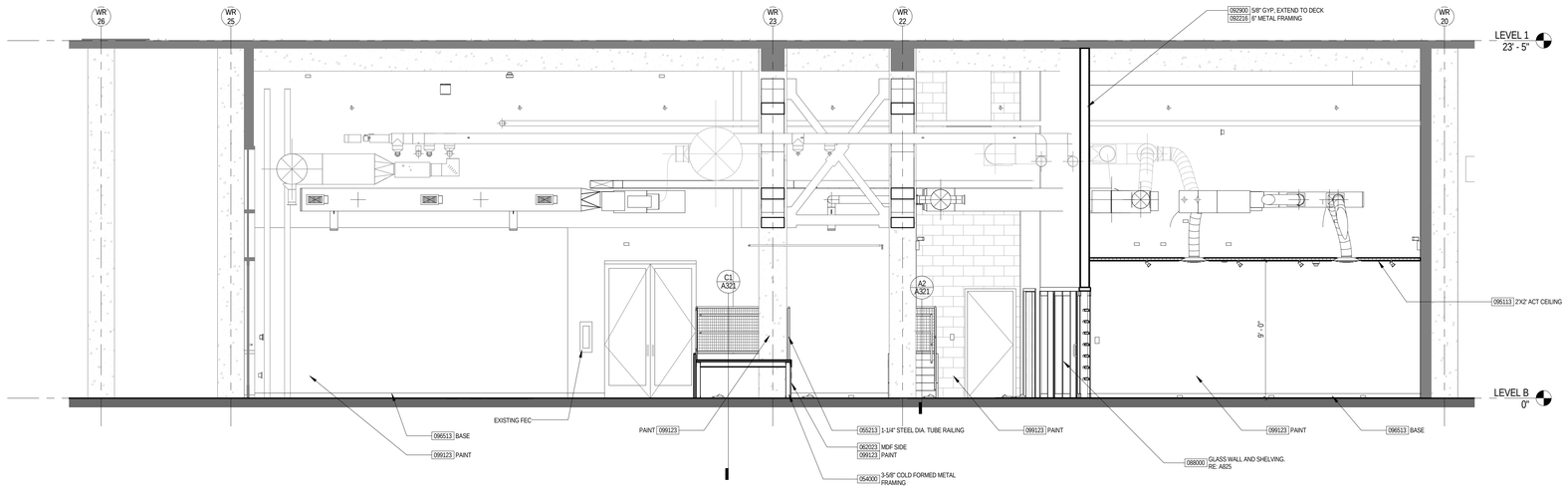

SECTION @ ALL ABOARD D1
1/4" = 1'-0"

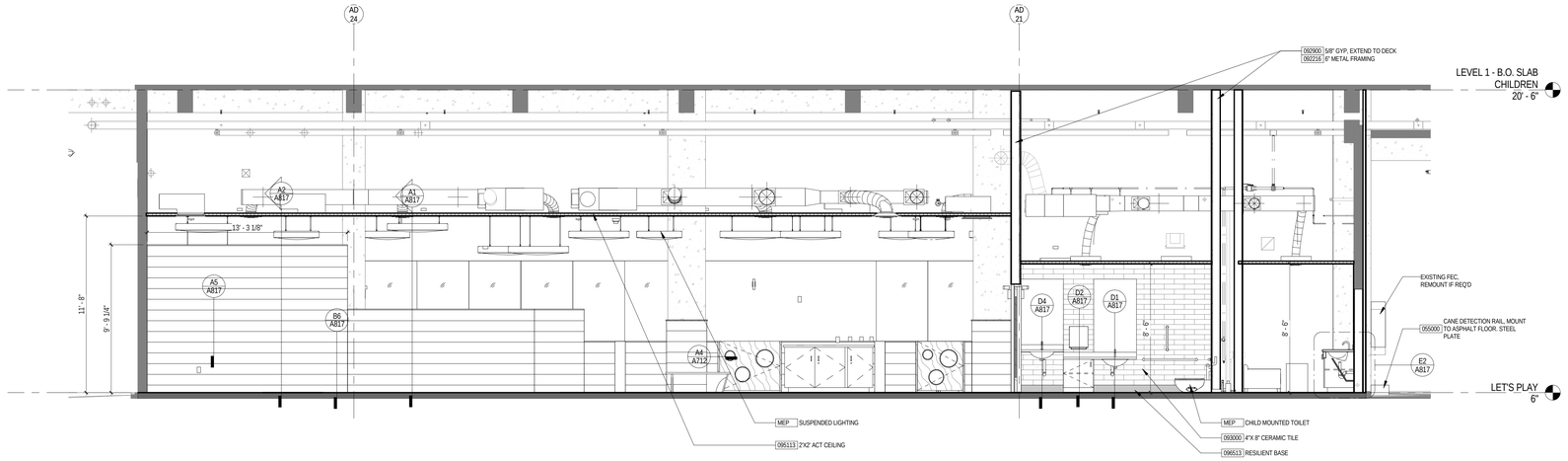

SECTION @ LET'S PLAY B1
1/4" = 1'-0"

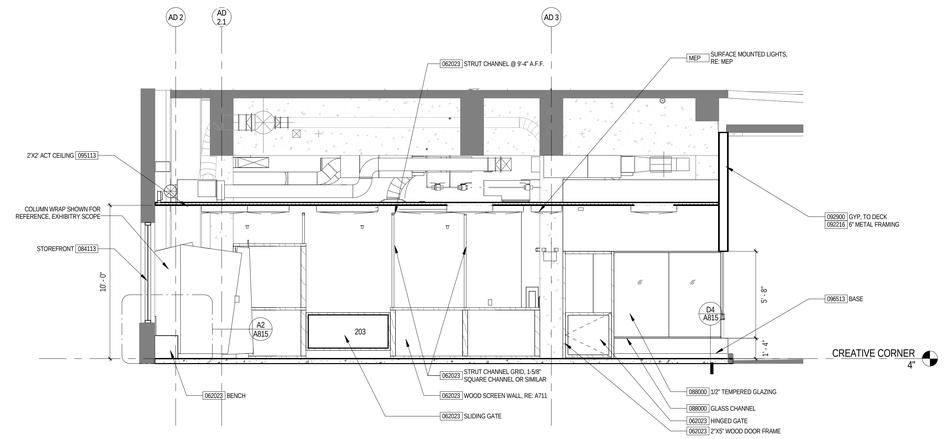

SECTION @ CREATIVE CORNER A1
1/4" = 1'-0"

PGAV ARCHITECTS
PECKHAM GUYTON ALBERS & VIETS, INC.
1900 W 47th Place, #300, Westwood, KS 66205
(913) 362-6500
www.PGAV.COM
Copyright ©2019

STATE OF MISSOURI
MICHAEL ALAN SCHAADT
NUMBER A-6073
ARCHITECT

THE SEAL AND SIGNATURE APPLY ONLY TO THE DOCUMENT TO WHICH THEY ARE AFFIXED. THE ARCHITECT ASSUMES NO RESPONSIBILITY FOR ALL OTHER PLANS, SPECIFICATIONS, ESTIMATES, REPORTS, OR OTHER DOCUMENTS OR INSTRUMENTS RELATIVE TO THE PROJECT WHICH DO NOT BEAR THE SEAL OF PARTS OF THE ARCHITECTURAL OR ENGINEERING PROJECT.

bgr CONSULTING ENGINEERS

#	DATE	DESCRIPTION

USKC EARLY CHILDHOOD EXHIBITS

SCIENCE CITY @ UNION STATION
30 W. PERSHING RD
KANSAS CITY, MO 64108

CONSTRUCTION DOCUMENTS

Original Size: 1 1/2" Drawing may have been reduced.
0" 1"

SECTIONS - EXHIBITS

DATE: 07/03/19
DRAWN: PGAV
CHECKED: PGAV
PGAV #: 53494-00
CLIENT #:
SHEET #: A510

7/3/2019 2:39:13 PM C:\Users\chris.buss\Desktop\53494-00_USKC_Children's Exhibits_cbuss\(Recovered)\.rvt

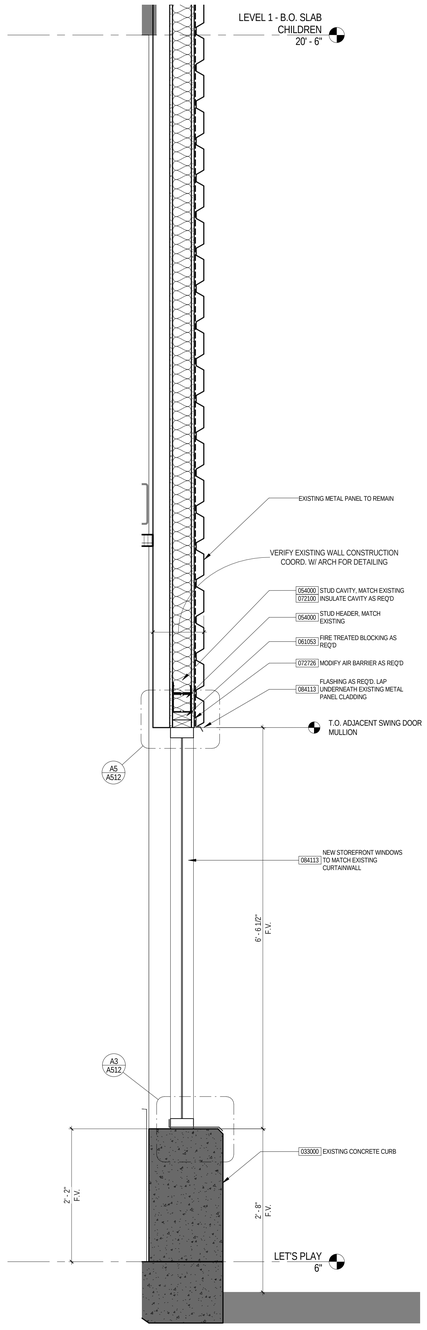

SECTION @ EXTERIOR WINDOW, TYP.
1" = 1'-0" **A6**

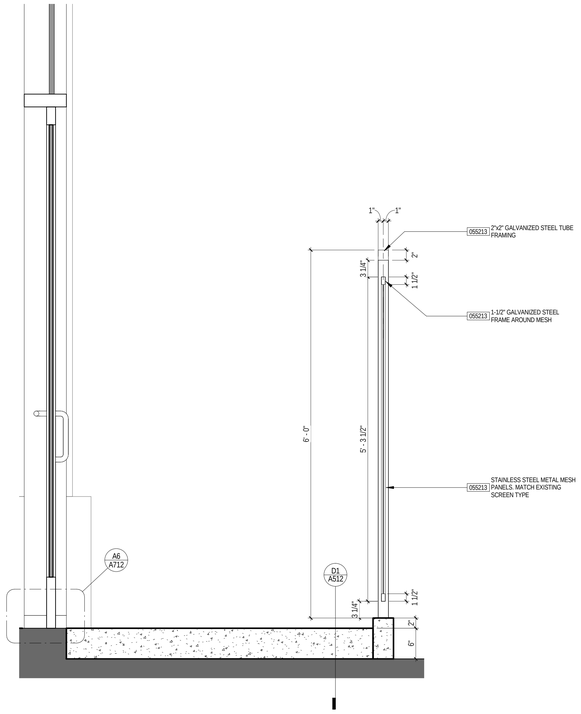

SECTION @ EXTERIOR RAMP / SCREEN
1" = 1'-0" **D4**

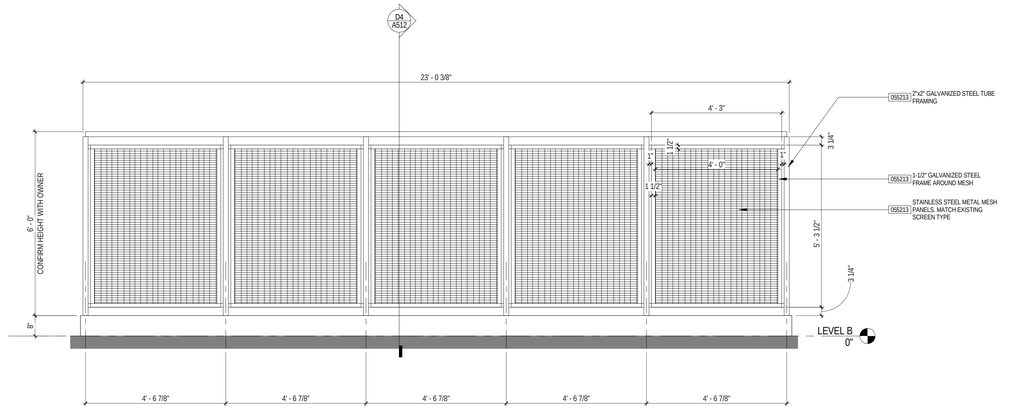

ELEVATION - SCREENWALL EXTERIOR
1/2" = 1'-0" **E1**

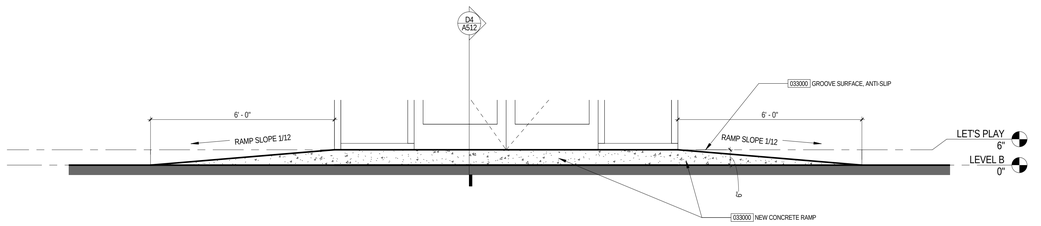

DETAIL @ CONCRETE RAMP BASE
1/2" = 1'-0" **D1**

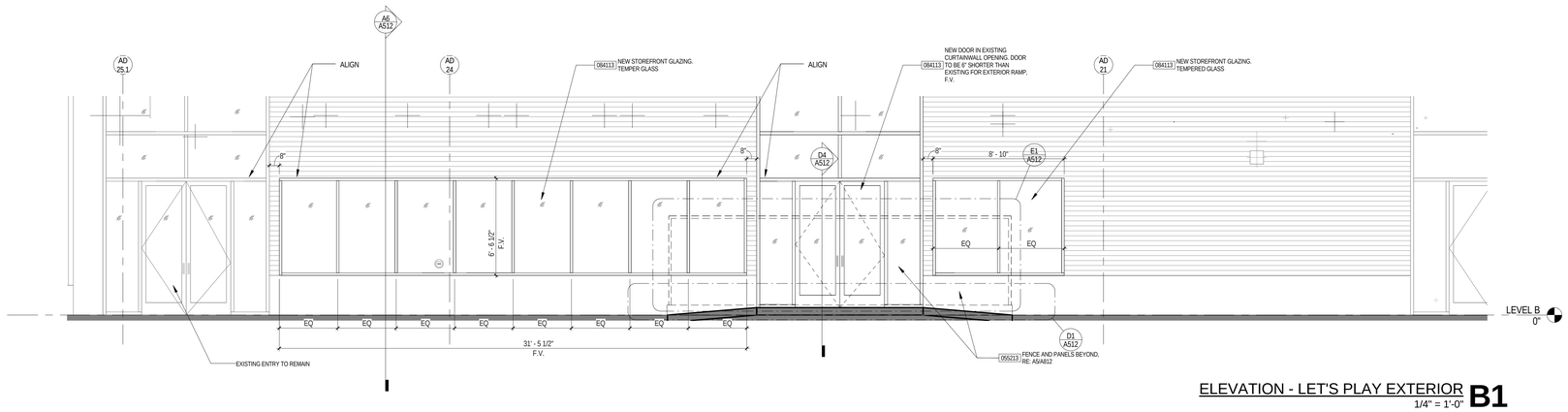

ELEVATION - LET'S PLAY EXTERIOR
1/4" = 1'-0" **B1**

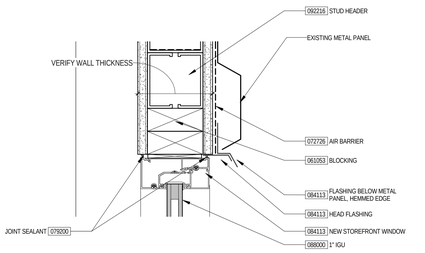

DETAIL @ WINDOW HEAD
3" = 1'-0" **A5**

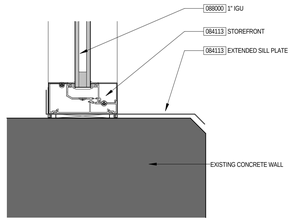

DETAIL @ WINDOW SILL
3" = 1'-0" **A3**

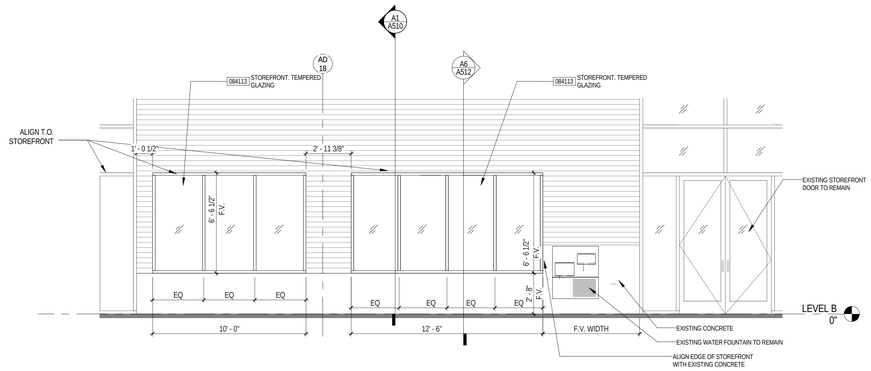

ELEVATION - EXTERIOR GLAZING @ CREATIVE CORNER
1/4" = 1'-0" **A1**

PGAV ARCHITECTS
PECKHAM GUYTON ALBERS & VIETS, INC.
1900 W 47th Place, #300, Westwood, KS 66205
(913) 362-6500
www.PGAV.COM
Copyright ©2019

THE SEAL AND SIGNATURE APPLY ONLY TO THE DOCUMENT TO WHICH IT IS AFFIXED. THE ARCHITECT HAS NO RESPONSIBILITY FOR ALL OTHER PLANS, SPECIFICATIONS, ESTIMATES, REPORTS, OR OTHER DOCUMENTS OR INSTRUMENTS RELATIVE TO OR INTENDED TO BE A PART OF OR ONE OF THE PARTS OF THE ARCHITECTURAL OR ENGINEERING PROJECT.

bgr CONSULTING ENGINEERS

#	DATE	DESCRIPTION

USKC EARLY CHILDHOOD EXHIBITS

SCIENCE CITY @ UNION STATION
30 W. PERSHING RD
KANSAS CITY, MO 64108

CONSTRUCTION DOCUMENTS

Original Size: 1 1/2" Drawing may have been reduced.

ELEVATIONS / DETAILS - CHILDREN'S EXHIBITS

DATE:	07/03/19
DRAWN: PGAV	CHECKED: PGAV
PGAV # 53494-00	CLIENT #

SHEET #: A512

C:\Users\chris.busch\Desktop\53494-00_USKC_Children's Exhibits_cbusch\Revit\wvy3.rvt
7/3/2019 2:39:17 PM

CEILING VIEW - LETS PLAY **B6**

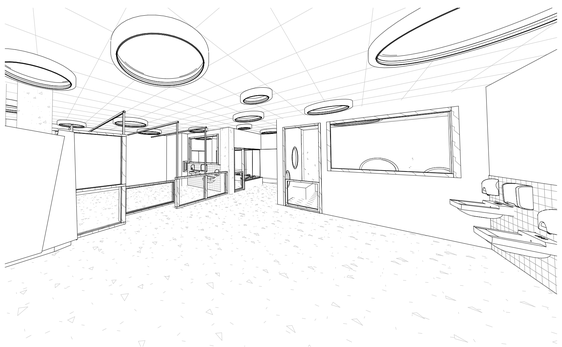

CEILING VIEW - CREATIVE CORNER **A6**

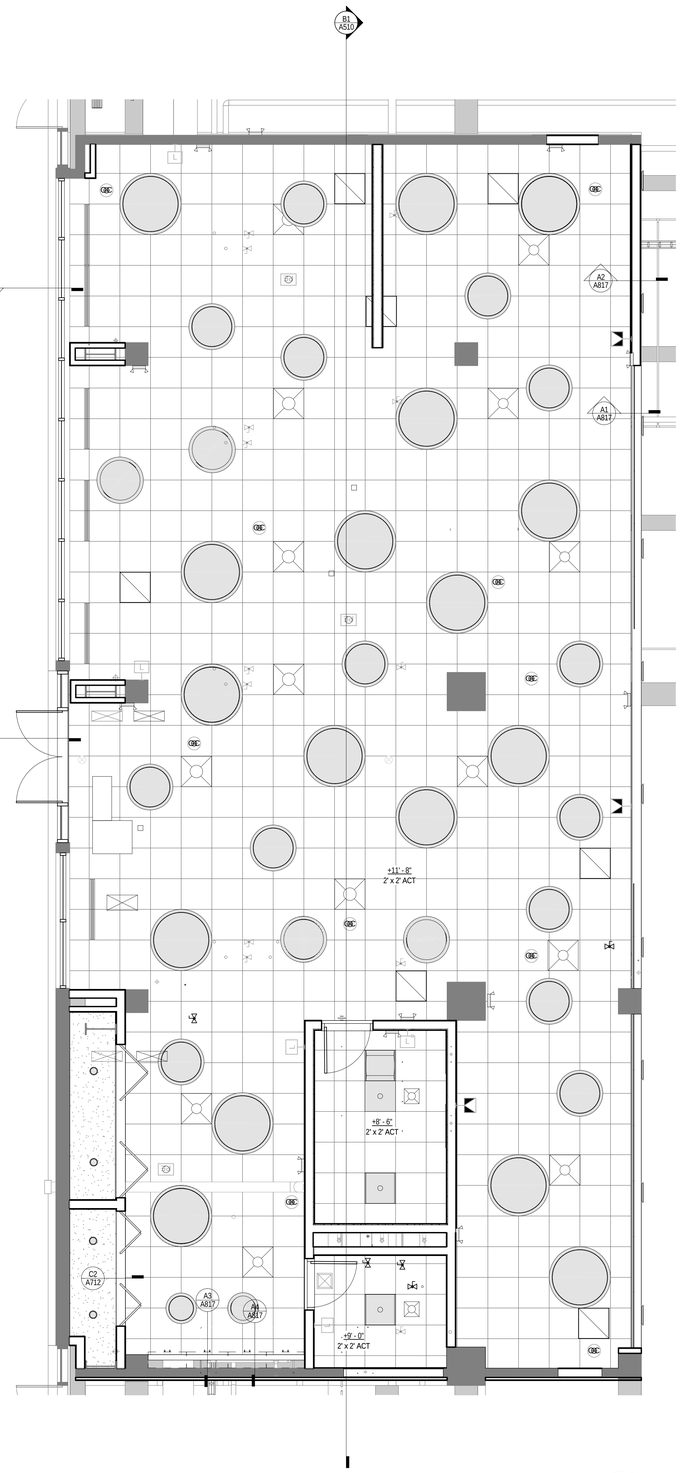

LET'S PLAY - RCP
1/4" = 1'-0" **A4**

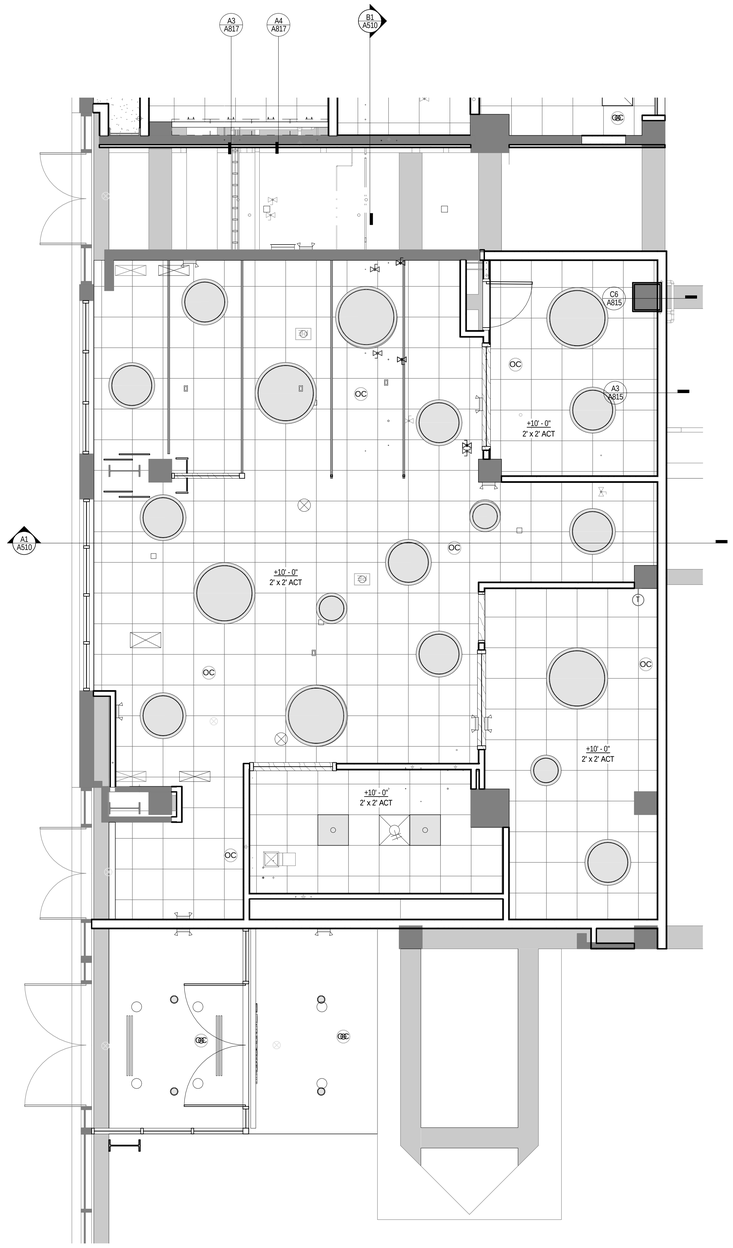

CREATIVE CORNER - RCP
1/4" = 1'-0" **A1**

PGAV ARCHITECTS
PECKHAM GUYTON ALBERS & VIETS, INC.
1900 W 47th Place, #300, Westwood, KS 66205
(913) 362-6500 www.PGAV.COM

Copyright ©2019

STATE OF MISSOURI
MICHAEL ALAN SCHAADT
NUMBER A-6037
ARCHITECT

THE SEAL AND SIGNATURE APPLY ONLY TO THE DOCUMENT TO WHICH THEY ARE AFFIXED AND DO NOT EXTEND TO ANY OTHER DOCUMENTS, INCLUDING WITHOUT LIMITATION, ALL OTHER PLANS, SPECIFICATIONS, ESTIMATES, REPORTS, OR OTHER DOCUMENTS OR INSTRUMENTS RELATING TO OR INTENDED TO BE USED FOR ANY PART OR PARTS OF THE ARCHITECTURAL OR ENGINEERING PROJECT.

bgr CONSULTING ENGINEERS

#	DATE	DESCRIPTION

USKC EARLY CHILDHOOD EXHIBITS

SCIENCE CITY @ UNION STATION
30 W. PERSHING RD
KANSAS CITY, MO 64108

CONSTRUCTION DOCUMENTS

Original Size: 1 1/2" Drawing may have been reduced.
0" 1"

RCP - CHILDREN'S EXHIBITS

DATE: 07/03/19
DRAWN: PGAV
CHECKED: PGAV
PGAV #: 53494-00
CLIENT #:
SHEET #: A610

C:\Users\chris.busch\Desktop\53494-00_USKC_Childrens-Exhibits_cbusch(Recovery).rvt
7/3/2019 2:31:18 PM

GENERAL NOTES

EXISTING LIGHTING RAILS AND SPOTLIGHTS TO REMAIN, CONTRACTOR TO ARRANGE PER OWNER'S DIRECTION

SEE MEP FOR EXISTING LIGHTING

PAINT FINISH THROUGHOUT GALLERY-

ABOVE 11'-2" - BENJAMIN MOORE 2120-40 SMOKE GRAY

BELOW 11'-2" - BENJAMIN MOORE 2120-70 STONE WHITE

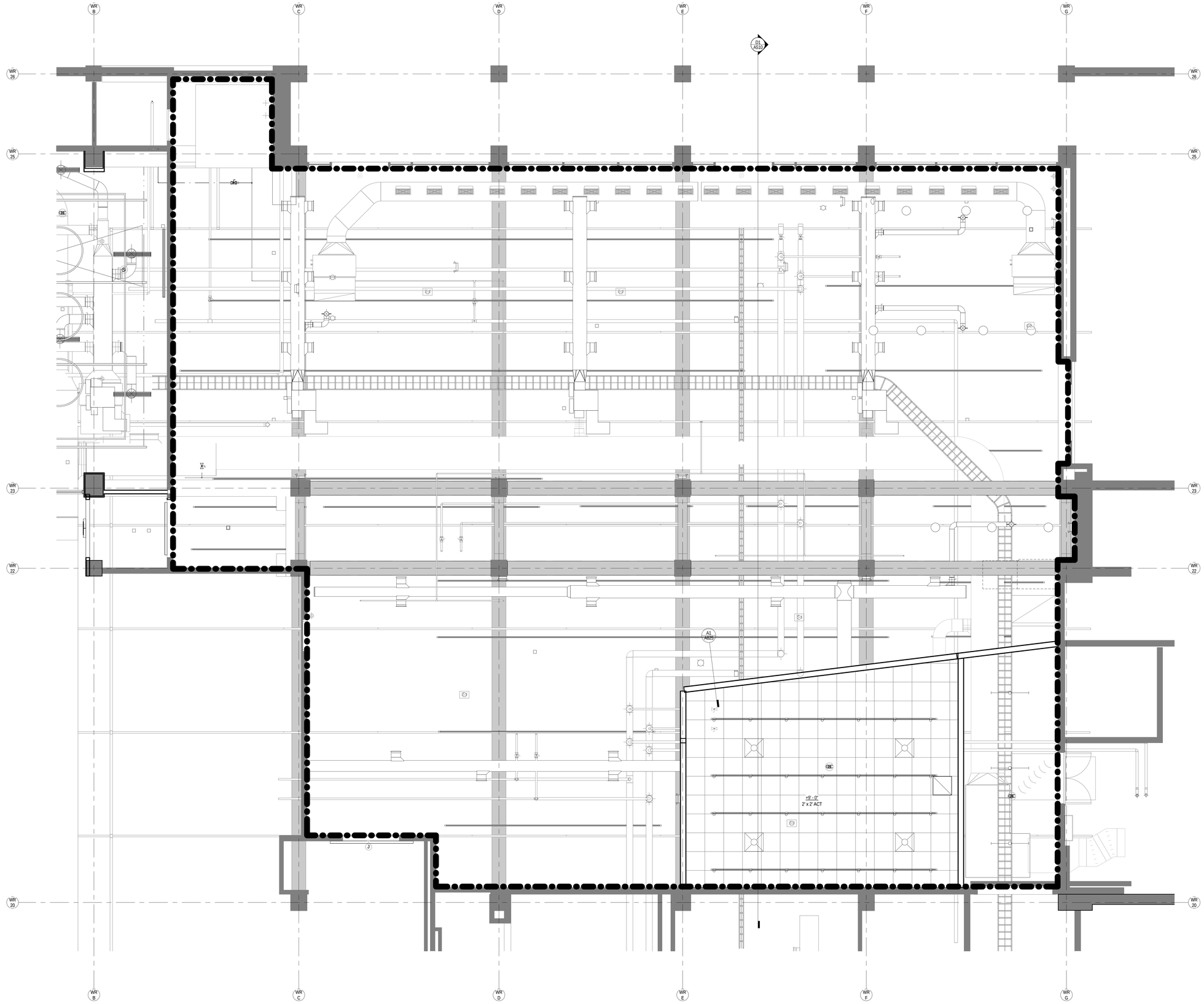

ALL ABOARD TRAIN EXHIBIT - RCP **A1**
1/4" = 1'-0"

PGAV ARCHITECTS
PECKHAM GUYTON ALBERS & VIETS, INC.
1900 W 47th Place, #300, Westwood, KS 66205
(913) 362-6500 www.PGAV.COM

Copyright ©2019

STATE OF MISSOURI
MICHAEL ALAN SCHAADT
NUMBER A-6037
ARCHITECT

THE SEAL AND SIGNATURE APPLY ONLY TO THE DOCUMENT TO WHICH THEY ARE AFFIXED AND DO NOT EXTEND TO ANY OTHER RESPONSIBILITY FOR ALL OTHER PLANS, SPECIFICATIONS, ESTIMATES, REPORTS, OR OTHER DOCUMENTS OR INSTRUMENTS RELATING TO OR ATTENDED TO BE USED FOR ANY PART OR PARTS OF THE ARCHITECTURAL OR ENGINEERING PROJECT.

bgr CONSULTING ENGINEERS

#	DATE	DESCRIPTION

USKC EARLY CHILDHOOD EXHIBITS

SCIENCE CITY @ UNION STATION
30 W. PERSHING RD
KANSAS CITY, MO 64108

CONSTRUCTION DOCUMENTS

Original Size: 1 1/2" Drawing may have been reduced.
0" 1"

RCP - ALL ABOARD

DATE: 07/03/19
DRAWN: PGAV
CHECKED: PGAV
PGAV #: 53494-00
CLIENT #:
SHEET #: A620

C:\Users\chris.busch\Desktop\53494-00_USKC_Childrens-Exhibits_cbusch(Recovery).rvt
7/3/2019 2:31:21 PM

DOOR SCHEDULE - CREATIVE CORNER

DOOR #	MATERIAL	DOOR TYPE	RATING	FRAME TYPE	FRAME MATERIAL	LEAF A WIDTH	LEAF B WIDTH	DOOR HEIGHT	HARDWARE SET	HEAD DETAIL	JAMB DETAIL	THRESHOLD DETAIL	COMMENTS
LEVEL B													
207	AL	E				4'-0"	4'-0"	9' - 0 1/4"		PER MANF	PER MANF	A1/A710 SIM	VESTIBULE DOORS
CREATIVE CORNER													
201A	WD-1	C				3'-0"		2' - 11"			B2/A710		PAINT ROOM GATE
201B	WD-1	A		1	HM	3'-0"		7' - 0"		C1/A710	B1/A710	A1/A710	STORAGE CLOSET IN PAINT ROOM
202	WD-1	C				3'-0"		2' - 11"			B4/A710	A4/A710	SAND STUDIO GATE
203	WD-1	D				5'-4"		2' - 5 1/2"		E1, E2 / A711	A1/A711	E1, E2 / A711	TODDLER EXPLORATION AREA SLIDING GATE
204	WD-1	C				3'-10"		2' - 11"			B6/A710		EXIT ONLY GATE FROM PROGRAM AREA
205	AL	B		1	HM	3'-0"		7' - 0"		C1/A710	B1/A710	A1/A710	STAFF PREP AREA

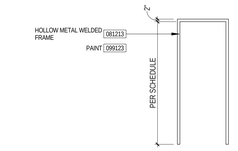

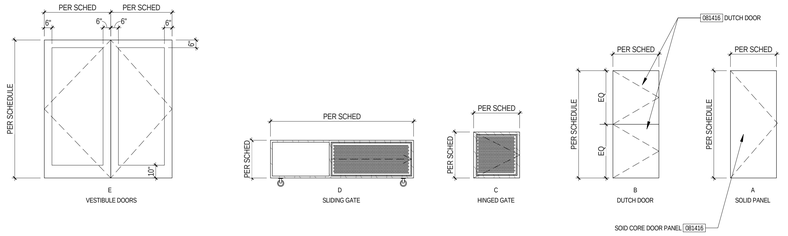

DOOR & WINDOW LEGEND
1/4" = 1'-0"

GENERAL NOTES:

-ALL MATERIALS TO BE SANDED SMOOTH, FREE OF BURS, SHARP EDGES AND CORNERS

PERFORATED METAL ON GATES
099123 WILL BE PRIMED AND POWDER COATED BENJAMIN MOORE 2031-30 - SWEET PEA

099300 ALL WOOD TO BE SEALED AND CLEAR COATED, 3 COATS

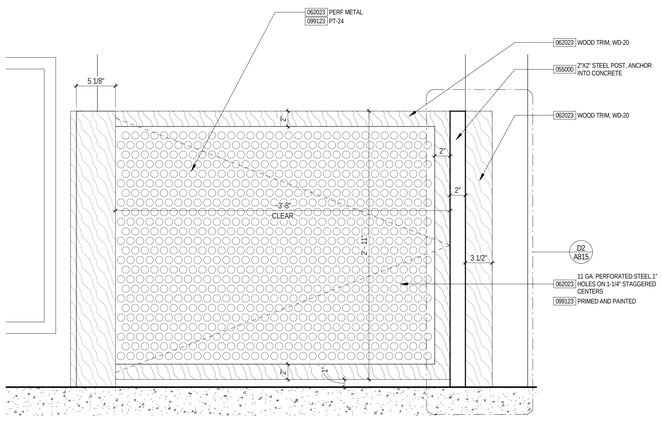

ELEVATION - GATE 204
1 1/2" = 1'-0" **C6**

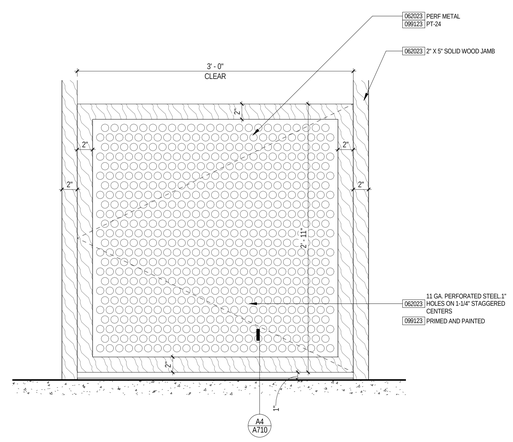

ELEVATION - GATE 202
1 1/2" = 1'-0" **C4**

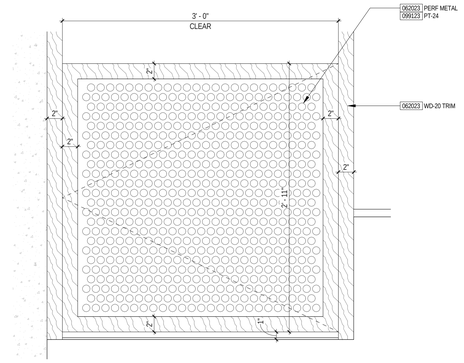

ELEVATION - GATE 201A
1 1/2" = 1'-0" **C2**

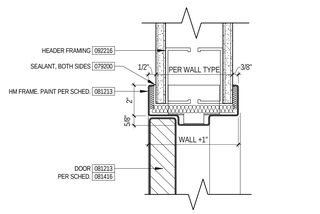

DOOR HEAD - GYP. TYPICAL
3" = 1'-0" **C1**

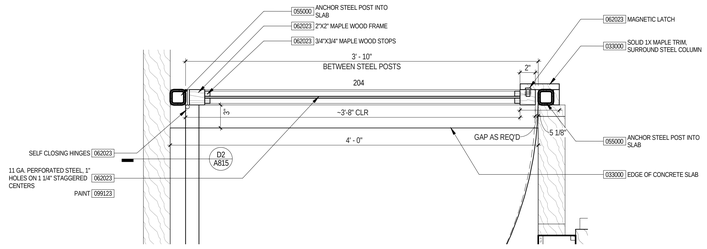

JAMB DETAIL - GATE 204
1 1/2" = 1'-0" **B6**

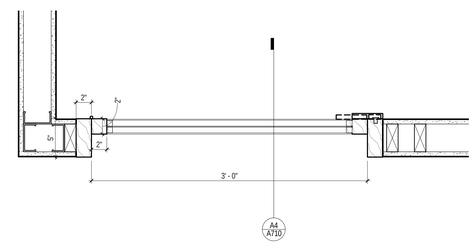

JAMB DETAIL - GATE 202
1 1/2" = 1'-0" **B4**

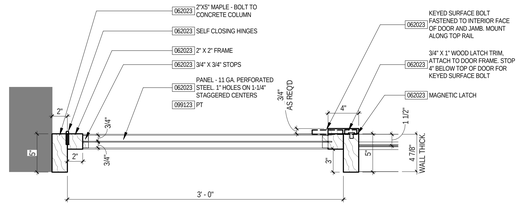

JAMB DETAIL - GATE 201A
1 1/2" = 1'-0" **B2**

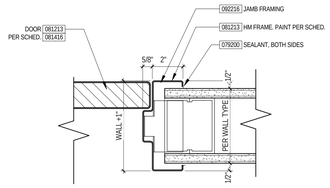

DOOR JAMB - GYP. TYPICAL
3" = 1'-0" **B1**

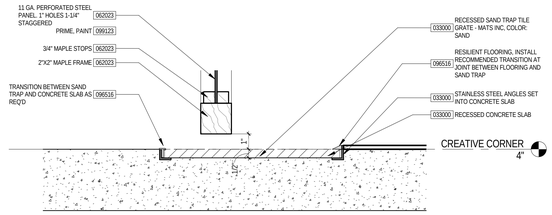

THRESHOLD DETAIL - GATE 202
3" = 1'-0" **A4**

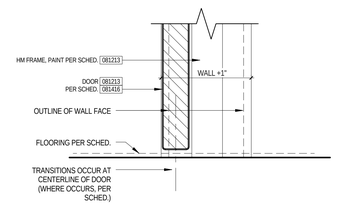

DOOR THRESHOLD - GYP. TYPICAL
3" = 1'-0" **A1**

PGAV ARCHITECTS
PECHAM GUYTON ALBERS & VIETS, INC.
1900 W. 47th Place, #300, Westwood, KS 66205
(913) 362-6500
www.PGAV.COM

Copyright ©2019

STATE OF MISSOURI MICHAEL ALAN SCHAADT NUMBER A-6073 ARCHITECT

THE SEAL AND SIGNATURE APPLY ONLY TO THE DOCUMENT TO WHICH THEY ARE AFFIXED AND DO NOT EXTEND TO ANY OTHER RESPONSIBILITY FOR ALL OTHER PLANS, SPECIFICATIONS, ESTIMATES, REPORTS, OR OTHER DOCUMENTS OR INSTRUMENTS, RELATIVE TO OR INTENDED FOR USE ON ANY PART OR PARTS OF THE ARCHITECTURAL OR ENGINEERING PROJECT.

bgr CONSULTING ENGINEERS

#	DATE	DESCRIPTION

USKC EARLY CHILDHOOD EXHIBITS

SCIENCE CITY @ UNION STATION
30 W. PERSHING RD
KANSAS CITY, MO 64108

CONSTRUCTION DOCUMENTS

Original Size: 1 1/2" Drawing may have been reduced.

DOOR SCHEDULE - CREATIVE CORNER

DATE: 07/03/19

DRAWN: PGAV | CHECKED: PGAV

PGAV # S3494-00 | CLIENT #

SHEET #: **A710**

7/3/2019 2:31:26 PM C:\Users\chris.busch\Desktop\S3494-00_USKC_Children-Exhibits_cbusch\Revitwrp3.rvt

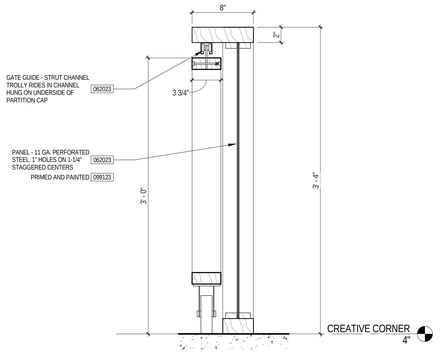

DETAIL @ SLIDING GATE TRACK SECTION **E2**
1 1/2" = 1'-0"

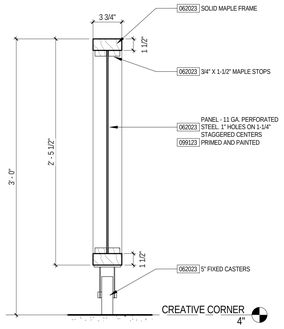

DETAIL @ SLIDING GATE SECTION **E1**
1 1/2" = 1'-0"

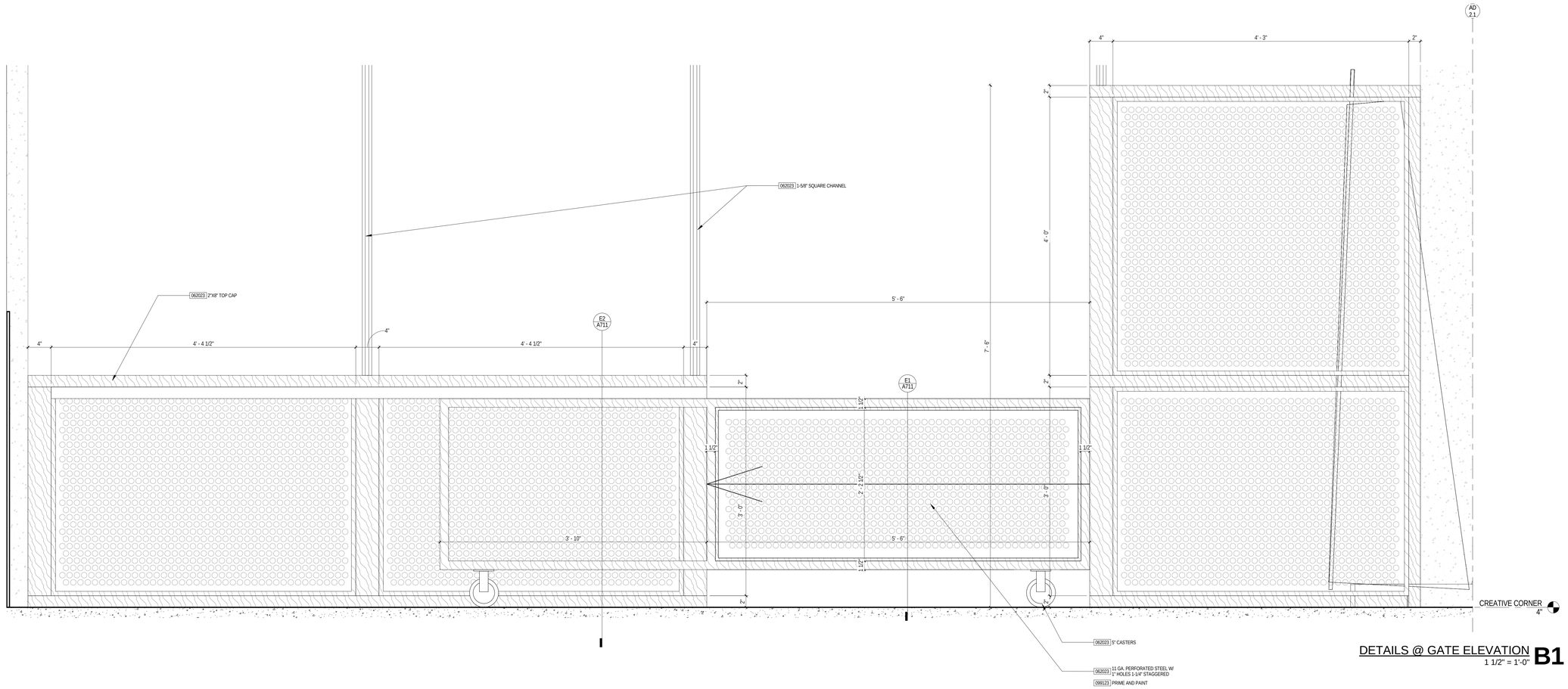

DETAILS @ GATE ELEVATION **B1**
1 1/2" = 1'-0"

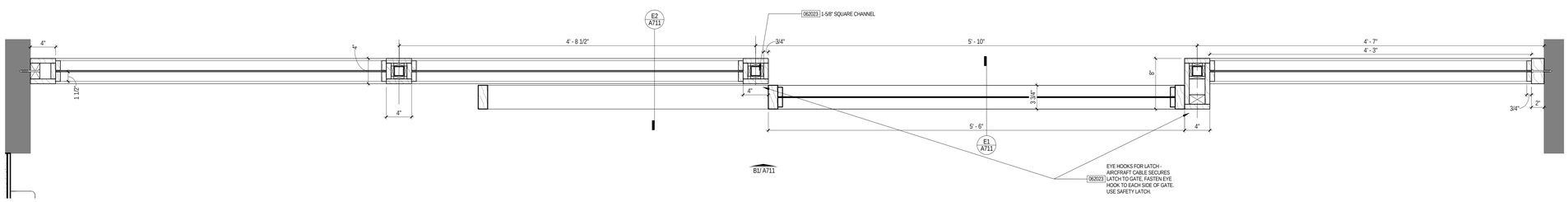

DETAIL @ GATE PLAN **A1**
1 1/2" = 1'-0"

PGAV

C:\Users\chris.busch\Desktop\53494-00_USKC_Childrens-Exhibits_cbusch(Recovery).rvt

7/3/2019 2:31:38 PM

PGAV ARCHITECTS
PECKHAM GUYTON ALBERS & VIETS, INC.
1900 W 47th Place, #300, Westwood, KS 66205
(913) 362-6500 www.PGAV.COM

Copyright ©2019

STATE OF MISSOURI
MICHAEL ALAN SCHAADT
NUMBER A-6037
ARCHITECT

THE SEAL AND SIGNATURE APPLY ONLY TO THE DOCUMENT TO WHICH THEY ARE AFFIXED AND DO NOT EXTEND THE RESPONSIBILITY FOR ALL OTHER PLANS, SPECIFICATIONS, ESTIMATES, REPORTS, OR OTHER DOCUMENTS OR INSTRUMENTS RELATING TO OR INTENDED TO BE USED FOR ANY PART OR PARTS OF THE ARCHITECTURAL OR ENGINEERING PROJECT.

bgr CONSULTING ENGINEERS

#	DATE	DESCRIPTION

USKC EARLY CHILDHOOD EXHIBITS

SCIENCE CITY @ UNION STATION
30 W. PERSHING RD
KANSAS CITY, MO 64108

CONSTRUCTION DOCUMENTS

Original Size: 1 1/2" Drawing may have been reduced.
0" 1"

DOOR DETAILS - CREATIVE CORNER

DATE: 07/03/19

DRAWN:	CHECKED:
PGAV	PGAV
PGAV # 53494-00	CLIENT #

SHEET #: A711

DOOR SCHEDULE - LET'S PLAY

DOOR #	MATERIAL	DOOR TYPE	RATING	FRAME TYPE	FRAME MATERIAL	LEAF A WIDTH	LEAF B WIDTH	HEIGHT	HARDWARE SET	HEAD DETAIL	JAMB DETAIL	THRESHOLD DETAIL	COMMENTS
LET'S PLAY													
101	WD-1	B				4'-0"		7' - 3"		B4/A712	A4/A712		ENTRY GATE TO LET'S PLAY
102	WD-1	C				3'-0"		7' - 3"		B4/A712	A4/A712		BABYSCAPE GATE IN LET'S PLAY
105	AL	E				3'-0"	3'-0"	8' - 6"				A6/A712	NEW EXIT DOORS TO BE PLACED IN EXISTING FRAME OPENING
106A	WD-1	D				10'-0"		8' - 0"		C2/A712	B2/A712	A2/A712	BIFOLD DOOR IN KITCHEN
106B	WD-1	D				7'-6"		8' - 0"		C2/A712	B2/A712	A2/A712	BIFOLD DOOR IN KITCHEN
107	WD-1	A		1	HM	3'-0"		7' - 0"		C1/A710	B1/A710	A1/A710	RESTROOM DOOR
108	WD-1	A		1	HM	3'-0"		7' - 0"		C1/A710	B1/A710	A1/A710	MOTHER'S ROOM DOOR

DOOR SCHEDULE - ALL ABOARD

DOOR #	MATERIAL	DOOR TYPE	RATING	FRAME TYPE	FRAME MATERIAL	LEAF A WIDTH	LEAF B WIDTH	HEIGHT	HARDWARE SET	HEAD DETAIL	JAMB DETAIL	THRESHOLD DETAIL	COMMENTS
LEVEL B													
302A	AL	2				3'-0"		6' - 10"		E4/A825	C4/A825		GLASS DOOR TO MODEL TRAIN ROOM
302B	AL	2				3'-0"		6' - 10"		E4/A825	C4/A825		GLASS DOOR TO MODEL TRAIN ROOM
303	WD-1	1		1	HM	3'-0"	3'-0"	7' - 0"		C1/A710	B1/A710	A1/A710	DOUBLE DOORS TO SERVICE CORRIDOR

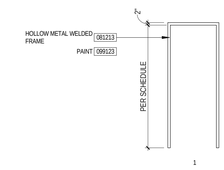

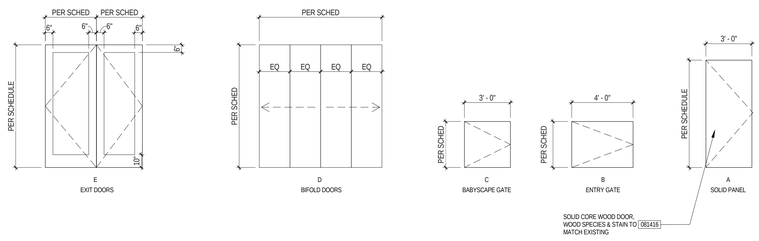

DOOR AND WINDOW LEGEND - LET'S PLAY D1
1/4" = 1'-0"

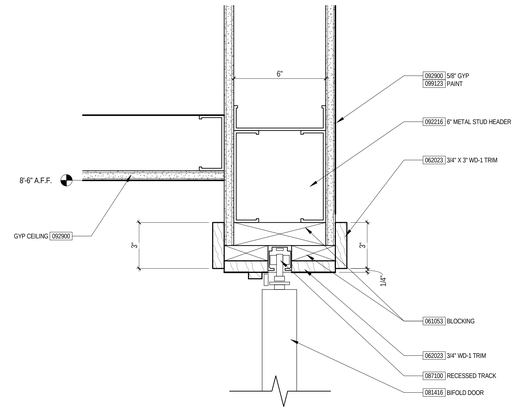

DETAIL @ BIFOLD DOOR HEAD C2
3" = 1'-0"

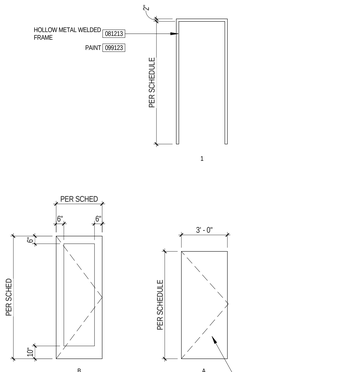

DOOR AND WINDOW LEGEND - ALL ABOARD C1
1/4" = 1'-0"

DETAIL @ BABYSCAPE GATE ELEVATION C5
1 1/2" = 1'-0"

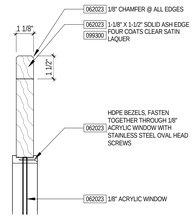

DETAIL @ LET'S PLAY GATE SECTION B4
3" = 1'-0"

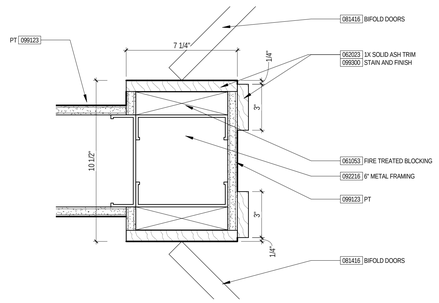

DETAIL @ BIFOLD DOOR JAMB B2
3" = 1'-0"

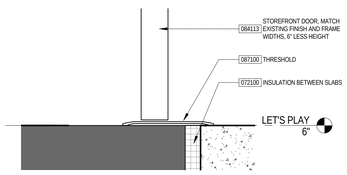

DETAIL @ STOREFRONT DOOR THRESHOLD A6
3" = 1'-0"

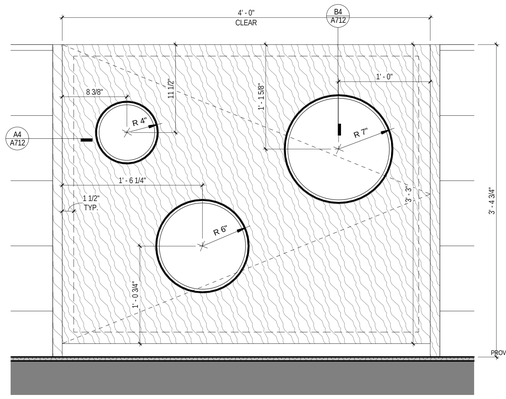

DETAIL @ LET'S PLAY ENTRY GATE A5
1 1/2" = 1'-0"

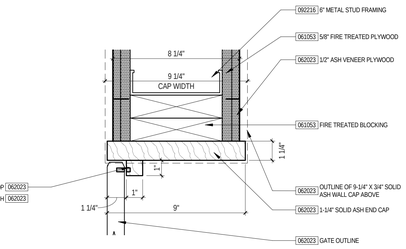

DETAIL @ LET'S PLAY GATE JAMB A4
3" = 1'-0"

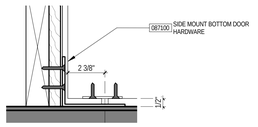

DETAIL @ BI-FOLD DOOR BOTTOM A2
3" = 1'-0"

PGAV ARCHITECTS
PECKHAM GUYTON ALBERS & VIETS, INC.
1900 W 47th Place, #300, Westwood, KS 66205
(913) 362-6500
www.PGAV.COM
Copyright ©2019

STATE OF MISSOURI MICHAEL ALAN SCHAADT NUMBER A-6677 ARCHITECT

THE SEAL AND SIGNATURE APPLY ONLY TO THE DOCUMENT TO WHICH IT IS AFFIXED. THE ARCHITECT DOES NOT ASSUME RESPONSIBILITY FOR ALL OTHER PLANS, SPECIFICATIONS, ESTIMATES, REPORTS, OR OTHER DOCUMENTS OR INSTRUMENTS RELATIVE TO THE PROJECT WHICH ARE NOT PREPARED BY PARTS OF THE ARCHITECTURAL OR ENGINEERING PROJECT.

bgr CONSULTING ENGINEERS

#	DATE	DESCRIPTION

USKC EARLY CHILDHOOD EXHIBITS

SCIENCE CITY @ UNION STATION
30 W. PERSHING RD
KANSAS CITY, MO 64108

CONSTRUCTION DOCUMENTS

Original Size: 1 1/2" Drawing may have been reduced.
0" 1"

DOOR SCHEDULE - LET'S PLAY / ALL ABOARD

DATE: 07/03/19
DRAWN: PGAV
CHECKED: PGAV
PGAV # 53494-00
CLIENT #
SHEET #: A712

7/2/2019 2:31:43 PM C:\Users\chris.huson\Desktop\53494-00_USKC_Childrens Exhibits_chuson\Revit\wny1.rvt

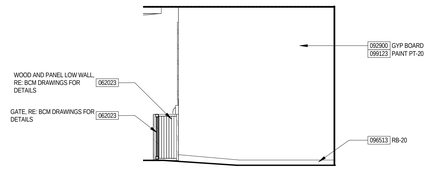

206 EGRESS ACCESS - EAST **E5**
1/4" = 1'-0"

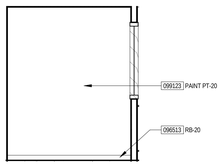

205 STAFF PREP - WEST **E4**
1/4" = 1'-0"

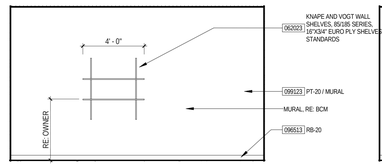

205 STAFF PREP - SOUTH **E3**
1/4" = 1'-0"

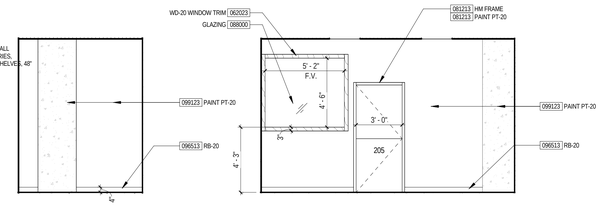

205 STAFF PREP - EAST **E2**
1/4" = 1'-0"

205 STAFF PREP - NORTH **E1**
1/4" = 1'-0"

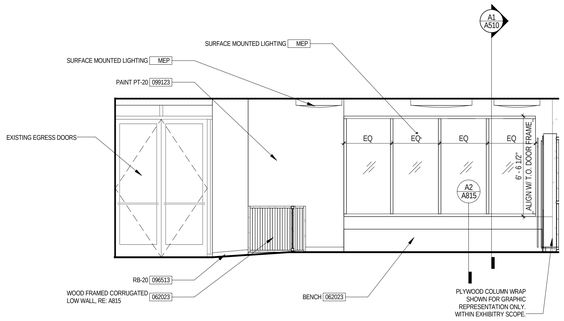

204 PROGRAM AREA - WEST1 **D5**
1/4" = 1'-0"

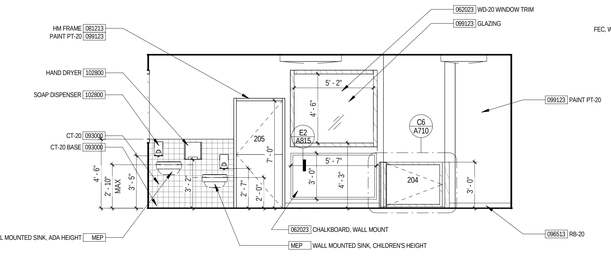

204 PROGRAM SPACE - SOUTH **D4**
1/4" = 1'-0"

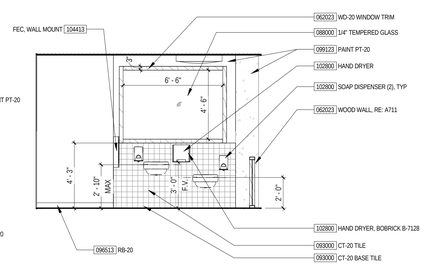

204 PROGRAM SPACE - EAST **D3**
1/4" = 1'-0"

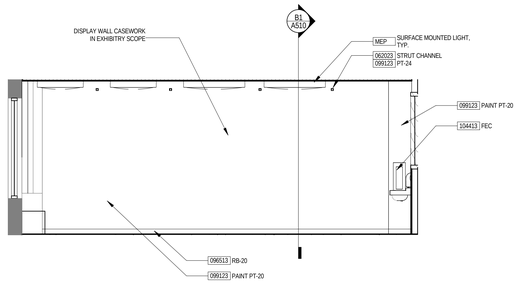

204 PROGRAM SPACE - NORTH **D1**
1/4" = 1'-0"

207 ELEVATION - VESTIBULE SOUTH **C6**
1/4" = 1'-0"

207 ELEVATION - VESTIBULE EAST **C5**
1/4" = 1'-0"

203 TODDLER EXPLORATION AREA - WEST **C3**
1/4" = 1'-0"

203 TODDLER EXPLORATION AREA - EAST **C2**
1/4" = 1'-0"

203 TODDLER EXPLORATION AREA - NORTH **C1**
1/4" = 1'-0"

202 SAND STUDIO - WEST **B4**
1/4" = 1'-0"

202 SAND STUDIO - SOUTH **B3**
1/4" = 1'-0"

202 SAND STUDIO - EAST **B2**
1/4" = 1'-0"

202 SAND STUDIO - NORTH **B1**
1/4" = 1'-0"

201 PAINT ROOM - WEST **A5**
1/4" = 1'-0"

201 PAINT ROOM - SOUTH **A4**
1/4" = 1'-0"

201 PAINT ROOM - EAST **A3**
1/4" = 1'-0"

201 PAINT ROOM - NORTH **A2**
1/4" = 1'-0"

200 ENTRY - SOUTH **A1**
1/4" = 1'-0"

PGAV ARCHITECTS
PECKHAM GUYTON ALBERS & VIETS, INC.
1900 W. 47th Place, #300, Westwood, KS 66205
(913) 362-6500
www.PGAV.COM
Copyright ©2019

STATE OF MISSOURI
MICHAEL ALAN SCHAADT
NUMBER A-6073
ARCHITECT

THE SEAL AND SIGNATURE APPLY ONLY TO THE DOCUMENT TO WHICH THEY ARE AFFIXED. THE ARCHITECT ASSUMES NO RESPONSIBILITY FOR ALL OTHER PLANS, SPECIFICATIONS, ESTIMATES, REPORTS, OR OTHER DOCUMENTS OR INSTRUMENTS RELATIVE TO THE PROJECT WHICH DO NOT BEAR THE SEAL OF THE ARCHITECTURAL OR ENGINEERING PRODUCT.

bgr CONSULTING ENGINEERS

#	DATE	DESCRIPTION

USKC EARLY CHILDHOOD EXHIBITS

SCIENCE CITY @ UNION STATION
30 W. PERSHING RD
KANSAS CITY, MO 64108

CONSTRUCTION DOCUMENTS

Original Size: 1 1/2" Drawing may have been reduced.
0" 1"

INTERIOR ELEVATIONS - CREATIVE CORNER

DATE: 07/03/19
DRAWN: PGAV
CHECKED: PGAV
PGAV # S3494-00
CLIENT #
SHEET #: A810

7/2/2019 2:31:52 PM C:\Users\chris.busch\Desktop\S3494-00_USKC_Children's-Exhibits_cbusch\Revitwork\.rvt

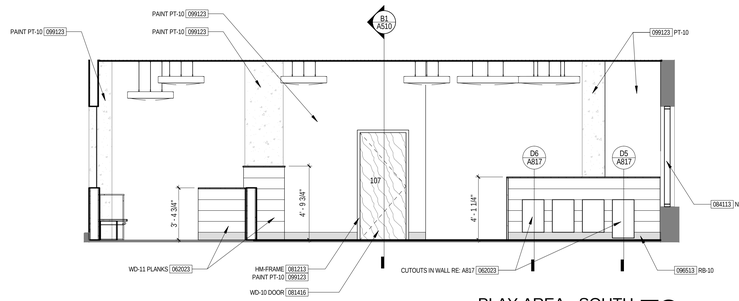

PLAY AREA - SOUTH E3
1/4" = 1'-0"

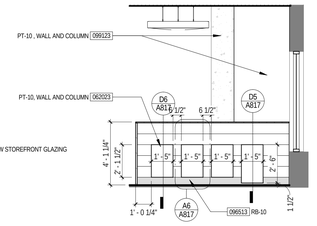

105 AIR PLAY - SOUTH E2
1/4" = 1'-0"

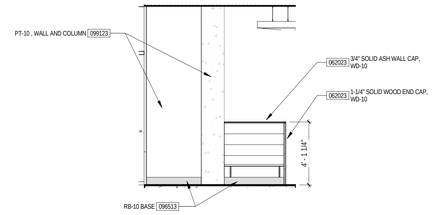

105 AIR PLAY - NORTH E1
1/4" = 1'-0"

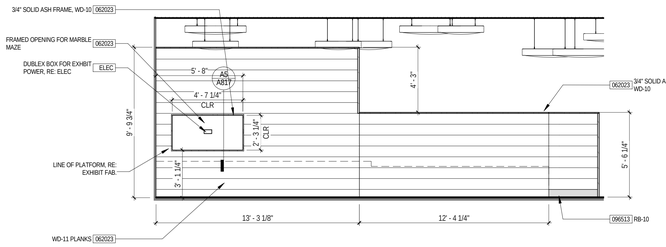

104 GROSS MOTOR - EAST D5
1/4" = 1'-0"

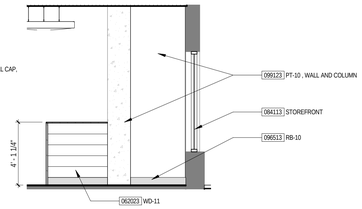

104 GROSS MOTOR - SOUTH D4
1/4" = 1'-0"

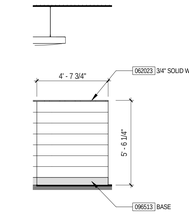

104 GROSS MOTOR - SOUTH EAST D3
1/4" = 1'-0"

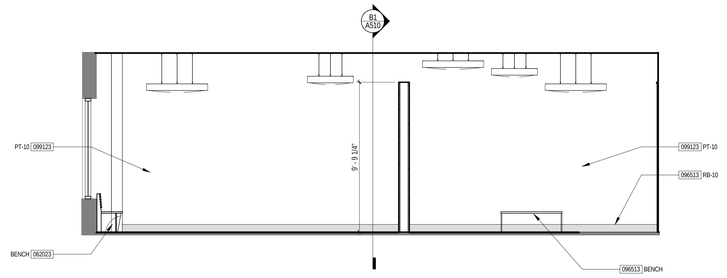

LET'S PLAY - NORTH D1
1/4" = 1'-0"

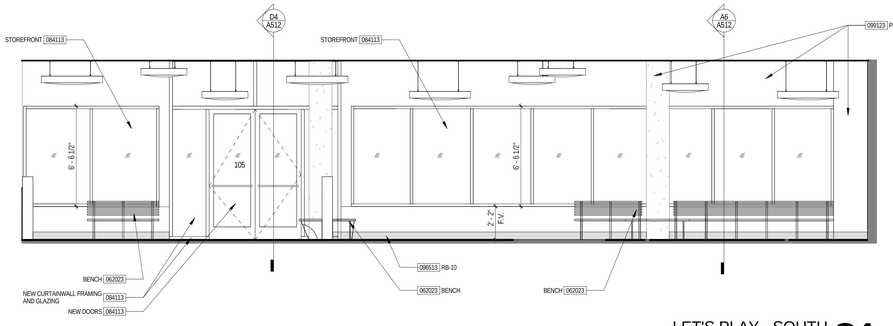

LET'S PLAY - SOUTH C4
1/4" = 1'-0"

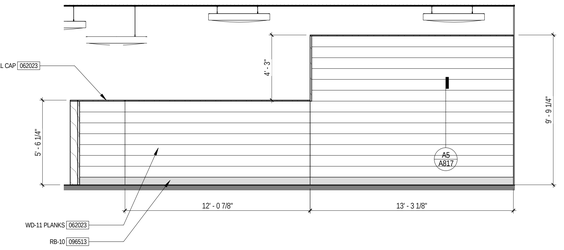

103 PRETEND PLAY - WEST C2
1/4" = 1'-0"

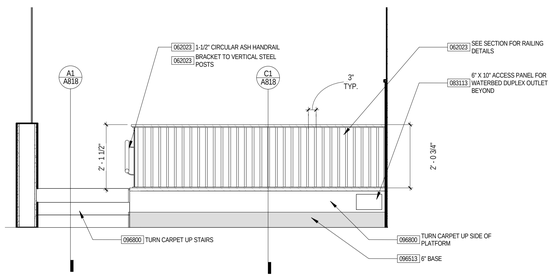

102 BABYSCAPE - RAIL ELEVATION C1
1/2" = 1'-0"

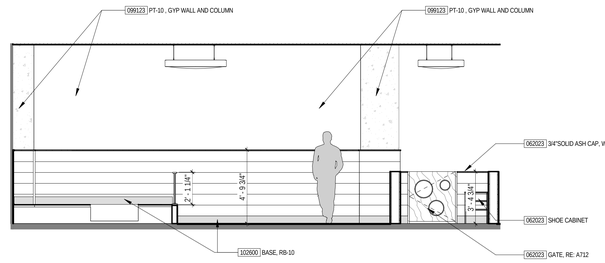

102 BABYSCAPE - WEST B5
1/4" = 1'-0"

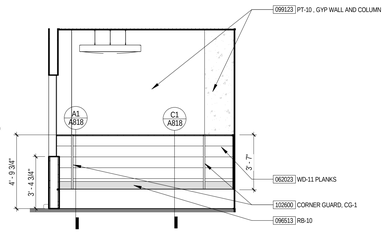

102 BABYSCAPE - SOUTH B4
1/4" = 1'-0"

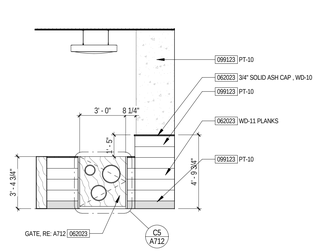

102 BABYSCAPE - EAST GATE B3
1/4" = 1'-0"

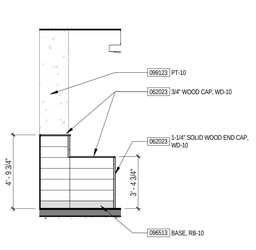

102 BABYSCAPE - NORTH 2 B2
1/4" = 1'-0"

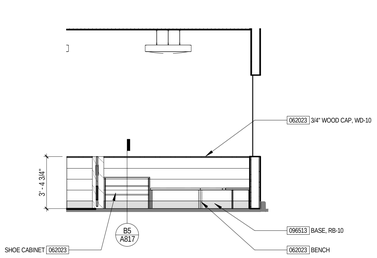

102 BABYSCAPE - NORTH 1 B1
1/4" = 1'-0"

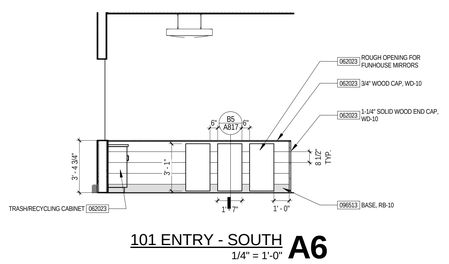

101 ENTRY - SOUTH A6
1/4" = 1'-0"

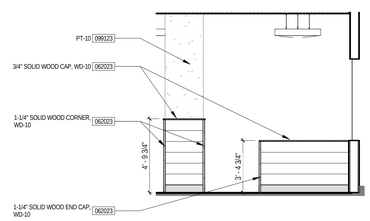

101 ENTRY - NORTH A5
1/4" = 1'-0"

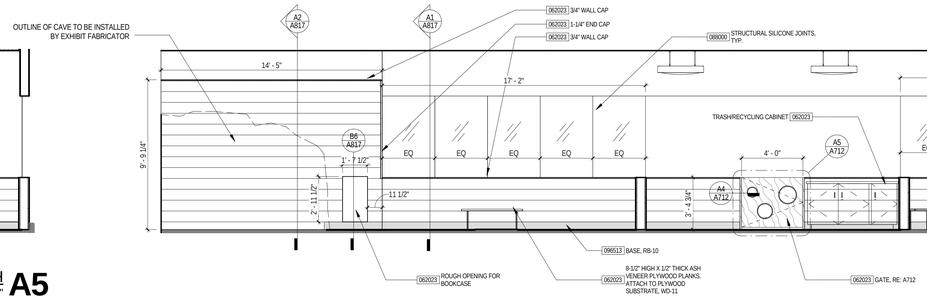

LET'S PLAY - EAST A1
1/4" = 1'-0"

PGAV ARCHITECTS
PECKHAM GUYTON ALBERS & VIETS, INC.
1900 W 47th Place, #300, Westwood, KS 66205
(913) 362-6500
www.PGAV.COM
Copyright ©2019

STATE OF MISSOURI
MICHAEL ALAN SCHAADT
NUMBER A-6071
12-31-19
ARCHITECT

THE SEAL AND SIGNATURE APPLY ONLY TO THE DOCUMENT TO WHICH IT IS AFFIXED. THE ARCHITECT DISCLAIMS ANY RESPONSIBILITY FOR ALL OTHER PLANS, SPECIFICATIONS, ESTIMATES, REPORTS, OR OTHER DOCUMENTS OR INSTRUMENTS RELATED TO THE PROJECT THAT DO NOT BEAR THE ORIGINAL OF THESE OF THE ARCHITECTURAL OR ENGINEERING PRODUCT.

bgr CONSULTING ENGINEERS

#	DATE	DESCRIPTION

USKC EARLY CHILDHOOD EXHIBITS

SCIENCE CITY @ UNION STATION
30 W. PERSHING RD
KANSAS CITY, MO 64108

CONSTRUCTION DOCUMENTS

Original Size: 1 1/2" Drawing may have been reduced.
0" 1" 2"

INTERIOR ELEVATIONS - LET'S PLAY

DATE: 07/03/19
DRAWN: PGAV
CHECKED: PGAV
PGAV # 53494-00
CLIENT #
SHEET # A811

C:\Users\chris.bucchi\Desktop\53494-00_USKC_Childrens Exhibits_chucchi\Revcmyn).rvt
7/3/2019 2:22:15 PM

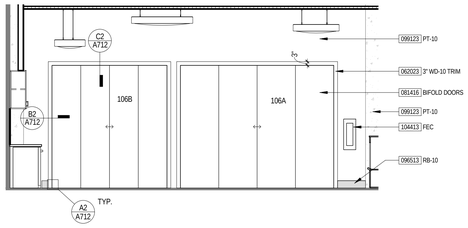

106 KITCHEN - WEST **E4**
1/4" = 1'-0"

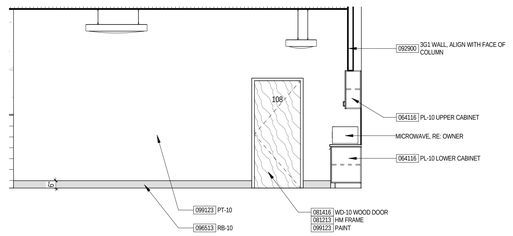

106 KITCHEN - EAST **E2**
1/4" = 1'-0"

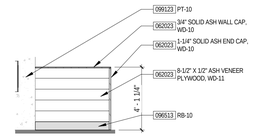

106 KITCHEN - NORTH **E1**
1/4" = 1'-0"

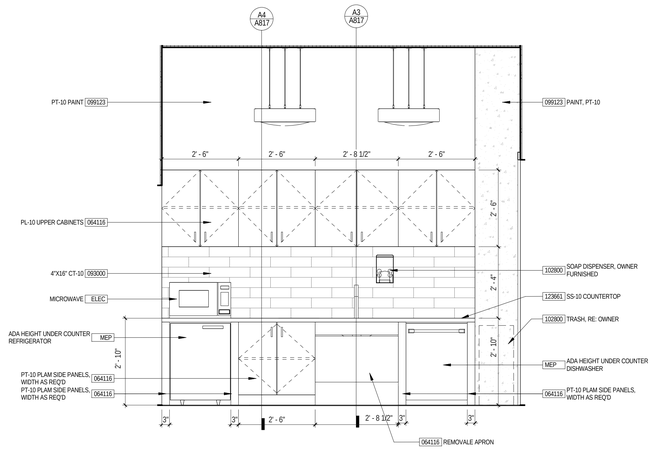

106 KITCHEN - SOUTH **D1**
1/2" = 1'-0"

TOILET ACCESSORIES SCHEDULE						
CALLOUT #	DESCRIPTION	MODEL NUMBER	MOUNTING	LOCATION	QUANTITY	NOTES
TH-1	TOILET PAPER HOLDER	BY OWNER	WALL MOUNTED			FURNISH BY OWNER
PD-1	PAPER TOWEL DISPENSER	BY OWNER	WALL MOUNTED			MANUAL DISPENSER
GB-1	GRAB BAR 18" VERTICAL	BOBRICK, B-6806 X 18	WALL MOUNTED			PEENED, SEE ELEVATIONS FOR MOUNTING LOCATIONS
GB-2	GRAB BAR 36" LONG	BOBRICK, B-6806 X 36	WALL MOUNTED			PEENED, SEE ELEVATIONS FOR MOUNTING LOCATIONS
GB-3	GRAB BAR 42" LONG	BOBRICK, B-6806 X 42	WALL MOUNTED			PEENED, SEE ELEVATIONS FOR MOUNTING LOCATIONS
WB-1	UNDERCOUNTER TRASH	COORD. W/ OWNER	FREE STANDING			ENTRY, BATHROOM, NURSING
WB-2	SIMILAR TO RUBBERMAID SLIM-JIM 8 GAL STEP ON RESIN	1883600 GRAY	FREE STANDING			BATHROOM, NURSING ROOM - COORD. HEIGHT AS REQ'D IN BATHROOM
RE-1	SIMILAR TO RUBBERMAID SLIM-JIM 23 GAL	FG354007BLUE	FREE STANDING			ENTRY, KITCHEN - WITH MIXED RECYCLING LID 2007891, COORD. W/ OWNER
MR-1	STAINLESS STEEL FRAME MIRROR		WALL MOUNTED			FIXED TILT
ND-1	SANITARY NAPKIN DISPOSAL	BOBRICK, B-270	SURFACE MOUNTED	BATHROOM	1	SEE ELEVATIONS FOR MOUNTING
SD-1	SOAP DISPENSER	BY OWNER	WALL MOUNTED	2 - BATHROOM, 1- KITCHEN	3	MANUAL DISPENSER
CS-1	WALL-HUNG CHANGING STATION	KOALAKARE - KB200-01SS	WALL MOUNTED	BATHROOM	1	
CP-1	WALL-MOUNTED CHILD PROTECTION SEAT	KOALAKARE - KB102-01	WALL MOUNTED	BATHROOM	1	MOUNT 14" OFF FLOOR
NV-1	SANITARY NAPKIN/TAMPON VENDOR	BOBRICK, B-3706 25	RECESSED MOUNTED			COIN OP, 25 CENT, MOUNT OPERABLE AT 38" A.F.F., ADD KNOB LATCH OPTION (NO KEYS)
CH-1	COAT/PURSE HOOK	BOBRICK, B-6707	DOOR MOUNTED			MOUNT TOP OF HOOK AT 42" A.F.F. CENTER ON DOOR

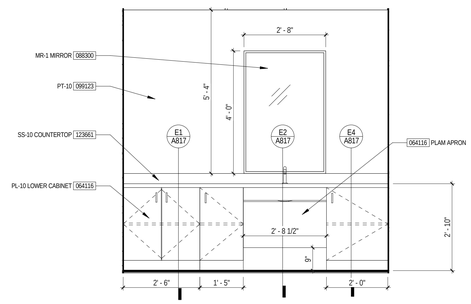

MOTHERS ROOM - SOUTH **B1**
1/2" = 1'-0"

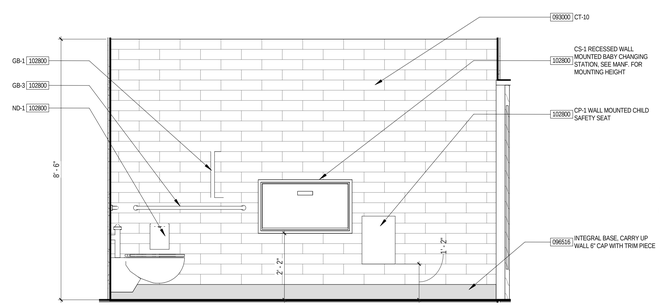

BATHROOM - WEST **A5**
1/2" = 1'-0"

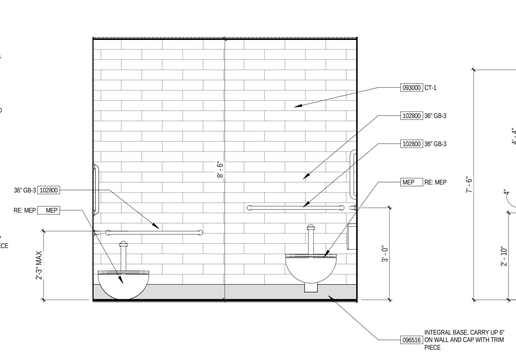

BATHROOM - SOUTH **A3**
1/2" = 1'-0"

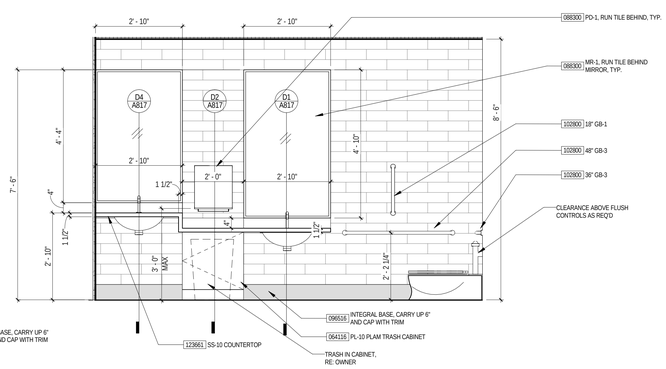

BATHROOM - EAST **A2**
1/2" = 1'-0"

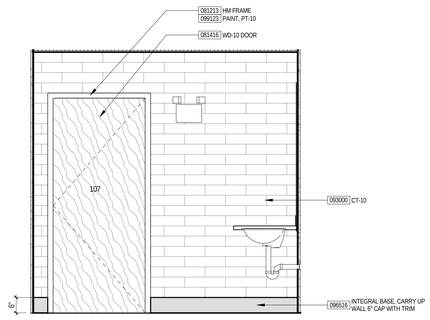

107 RESTROOM - NORTH **A1**
1/2" = 1'-0"

PECKHAM GUYTON ALBERS & VIETS, INC.
1900 W. 47th Place, #300, Westwood, KS 66205
(913) 362-6500 www.PGAV.COM
Copyright ©2019

THE SEAL AND SIGNATURE APPLY ONLY TO THE DOCUMENT TO WHICH THEY ARE AFFIXED AND DO NOT EXTEND TO ANY OTHER RESPONSIBILITY FOR ALL OTHER PLANS, SPECIFICATIONS, ESTIMATES, REPORTS, OR OTHER DOCUMENTS OR INSTRUMENTS RELATIVE TO OR DELIVERED IN CONNECTION WITH ANY PART OF THE ARCHITECTURAL OR ENGINEERING PROJECT.

bgr CONSULTING ENGINEERS

#	DATE	DESCRIPTION

USKC EARLY CHILDHOOD EXHIBITS

SCIENCE CITY @ UNION STATION
30 W. PERSHING RD
KANSAS CITY, MO 64108

CONSTRUCTION DOCUMENTS

Original Size: 1 1/2" Drawing may have been reduced.
0" 1"

INTERIOR ELEVATIONS - LET'S PLAY

DATE: 07/03/19
DRAWN: PGAV | CHECKED: PGAV
PGAV # S3494-00 | CLIENT #
SHEET #: A812

7/2/2019 2:22:23 PM C:\Users\chris.busch\Desktop\S3494-00_USKC_Children-Exhibits_cbusch\Recovery\.rvt

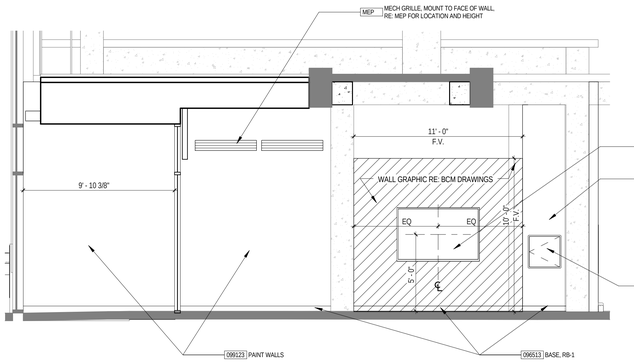

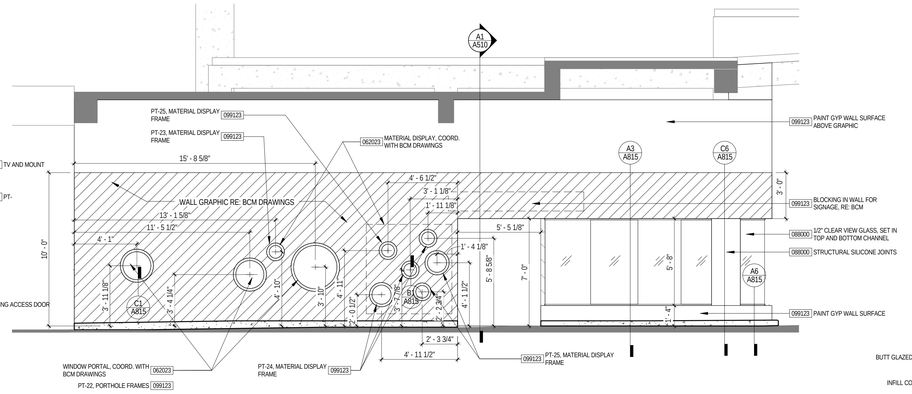

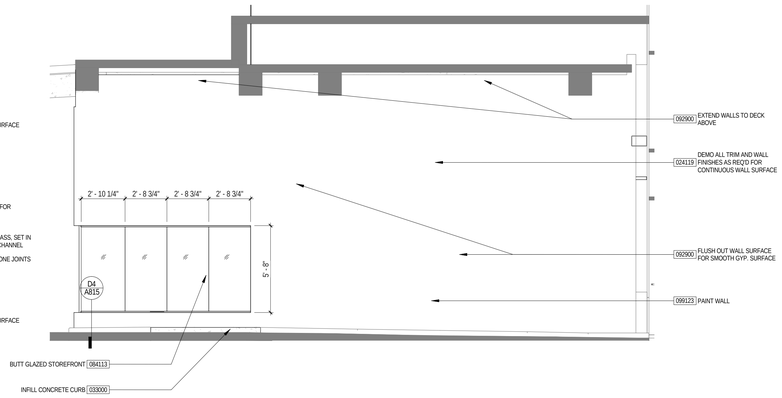

CREATIVE CORNER - SOUTH ELEVATION **D6**
1/4" = 1'-0"

CREATIVE CORNER - WEST HALLWAY ELEVATION **D2**
1/4" = 1'-0"

CREATIVE CORNER - NORTH HALLWAY ELEVATION **D1**
1/4" = 1'-0"

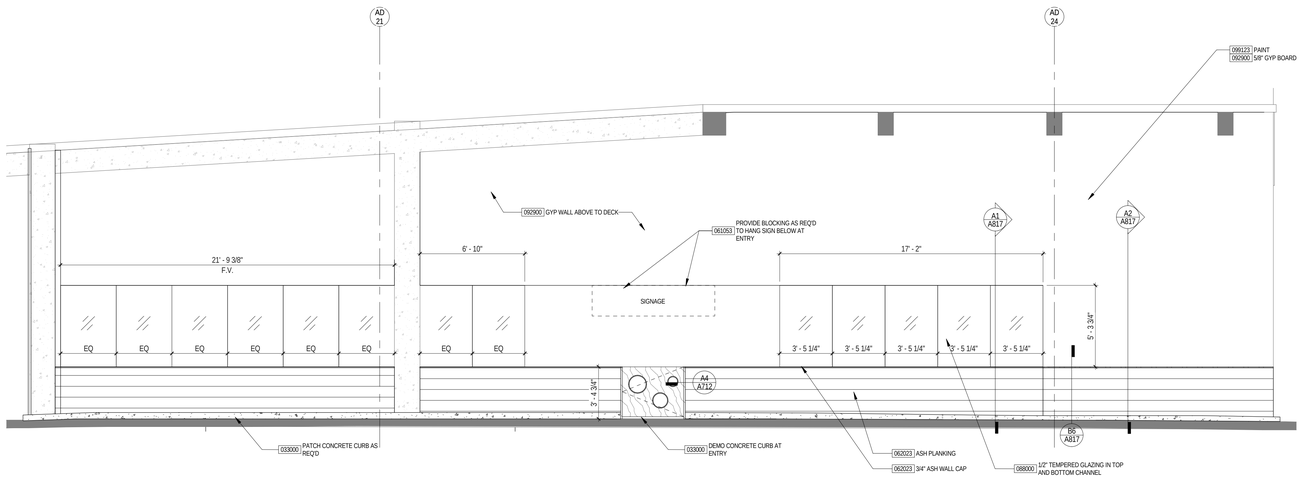

LET'S PLAY WEST HALLWAY ELEVATION **B1**
1/4" = 1'-0"

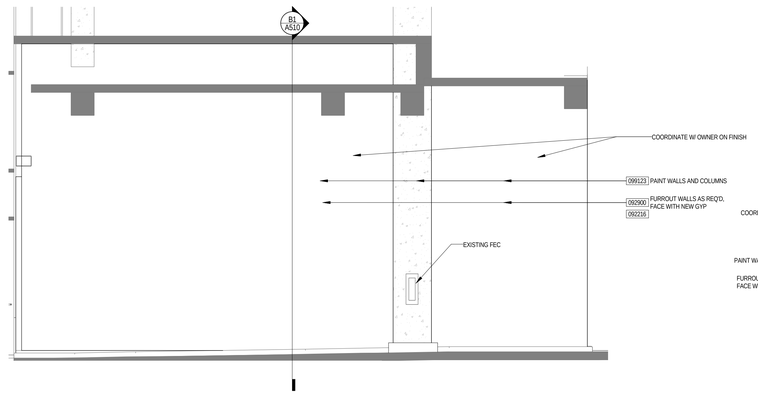

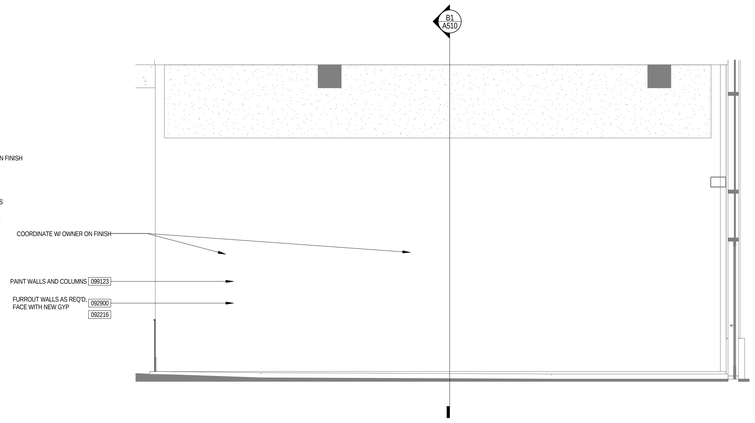

LET'S PLAY - SOUTH HALLWAY ELEVATION **A4**
1/4" = 1'-0"

LET'S PLAY - NORTH HALLWAY ELEVATION **A1**
1/4" = 1'-0"

PGAV ARCHITECTS
PECKHAM GUYTON ALBERS & VIETS, INC.
1900 W. 47th Place, #300, Westwood, KS 66205
(913) 362-6500
www.PGAV.COM
Copyright ©2019

STATE OF MISSOURI
MICHAEL ALAN SCHAADT
NUMBER A-6073
ARCHITECT

THE SEAL AND SIGNATURE APPLY ONLY TO THE DOCUMENT TO WHICH IT IS AFFIXED AND NOT TO ANY REPRODUCTIONS. NOT RESPONSIBLE FOR ALL OTHER PLANS, SPECIFICATIONS, ESTIMATES, REPORTS, OR OTHER DOCUMENTS OR INSTRUMENTS RELATING TO OR CHANGES MADE TO THESE DOCUMENTS EXCEPT BY THE ARCHITECTURAL OR ENGINEERING FIRM(S).

bgr CONSULTING ENGINEERS

#	DATE	DESCRIPTION

USKC EARLY CHILDHOOD EXHIBITS

SCIENCE CITY @ UNION STATION
30 W. PERSHING RD
KANSAS CITY, MO 64108

CONSTRUCTION DOCUMENTS

Original Size: 1 1/2" Drawing may have been reduced.
0" 1"

INTERIOR ELEVATIONS - WALKWAY SIDES

DATE: 07/03/19
DRAWN: PGAV
CHECKED: PGAV
PGAV #: 53494-00
CLIENT #:
SHEET #: A813

7/3/2019 2:22:24 PM C:\Users\chris.buss\Desktop\53494-00_USKC_Children's Exhibits_chriss\Recovery\.rvt

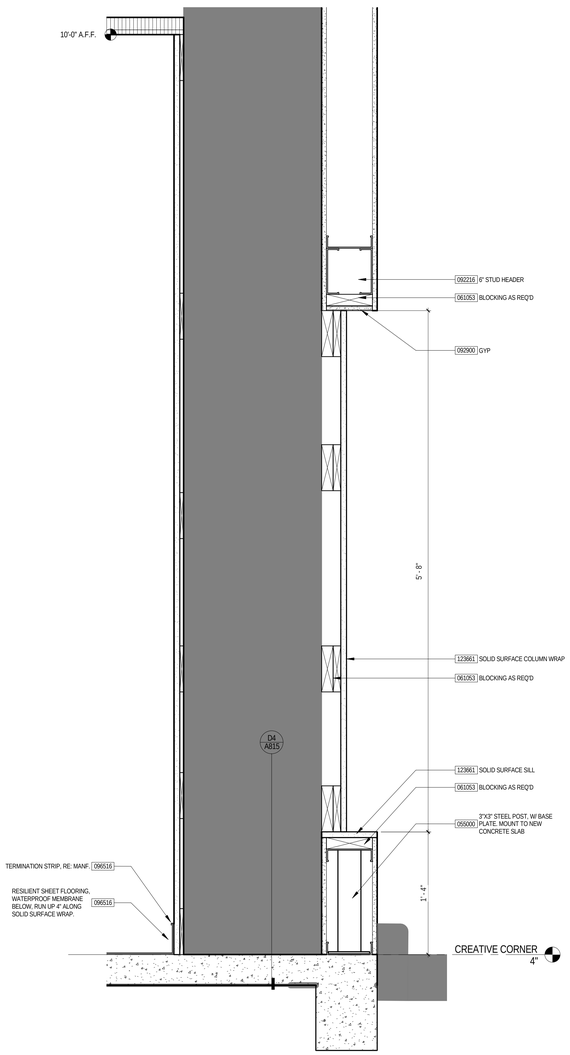

DETAIL @ GLAZING / COLUMN C6
1 1/2" = 1'-0"

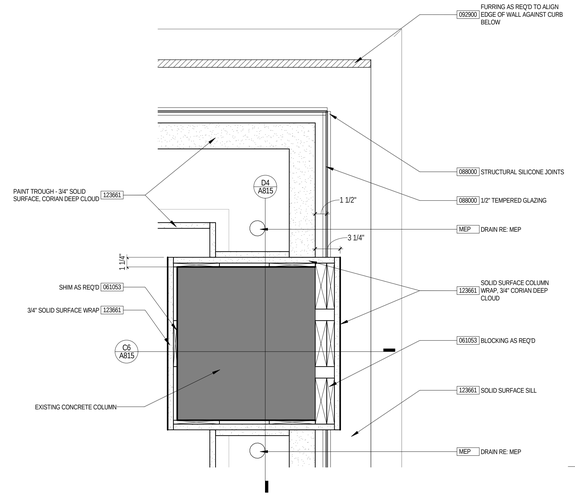

DETAIL @ PAINT TROUGH CORNER D5
1 1/2" = 1'-0"

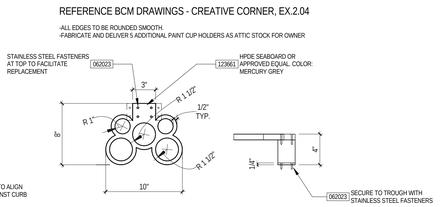

PAINT TROUGH DETAIL E4
1 1/2" = 1'-0"

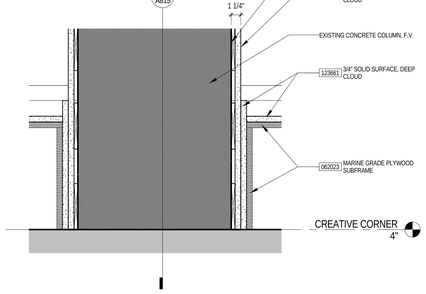

DETAIL @ COLUMN TROUGH D4
1 1/2" = 1'-0"

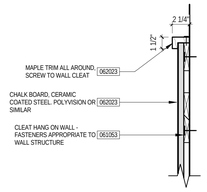

DETAIL @ CHALK BOARD E2
1 1/2" = 1'-0"

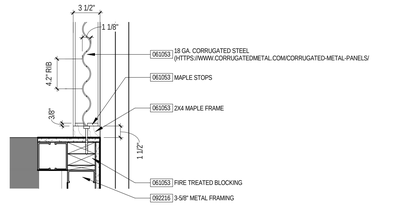

DETAIL @ CORRUGATED CORNER E1
1 1/2" = 1'-0"

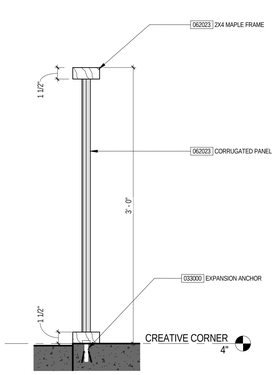

DETAIL @ CORRUGATED WALL D2
1 1/2" = 1'-0"

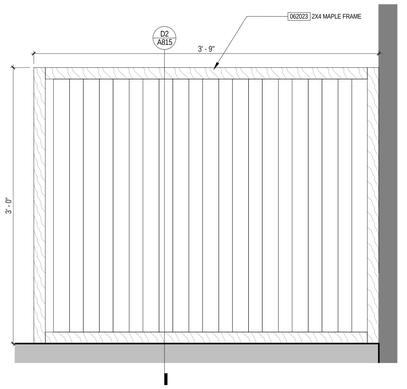

ELEVATION - TYP. CORRUGATED D1
1 1/2" = 1'-0"

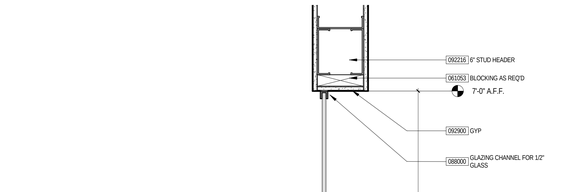

DETAIL @ PAINT TROUGH A3
1 1/2" = 1'-0"

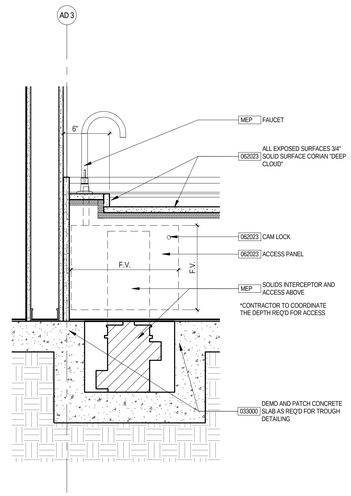

DETAIL @ TROUGH OPENING A6
1 1/2" = 1'-0"

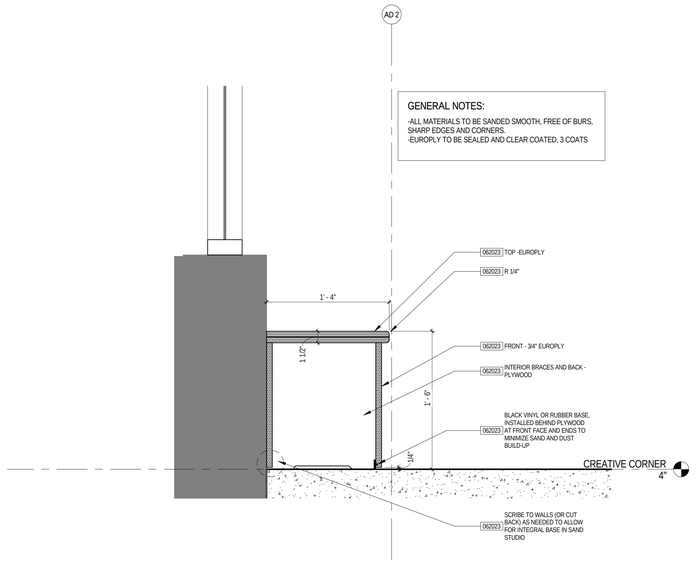

DETAIL @ CASEWORK BENCH A2
1 1/2" = 1'-0"

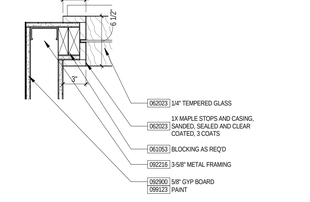

DETAIL @ WINDOW PORTAL JAMB C1
1 1/2" = 1'-0"

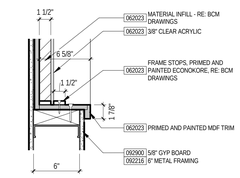

DETAIL @ MATERIAL DISPLAY B1
1 1/2" = 1'-0"

DETAIL @ WINDOW JAMB CREATIVE CORNER, TYP. A1
1 1/2" = 1'-0"

PGAV ARCHITECTS
PECKHAM GUYTON ALBERS & VIETS, INC.
1900 W 47th Place, #300, Westwood, KS 66205
(913) 362-6500
www.PGAV.COM
Copyright ©2019

STATE OF MISSOURI
MICHAEL ALAN SCHAADT
NUMBER A-6071
ARCHITECT

THE SEAL AND SIGNATURE APPLY ONLY TO THE DOCUMENT TO WHICH THEY ARE AFFIXED. THE ARCHITECT ASSUMES NO RESPONSIBILITY FOR ALL OTHER PLANS, SPECIFICATIONS, ESTIMATES, REPORTS, OR OTHER DOCUMENTS OR INSTRUMENTS RELATIVE TO THE PROJECT WHICH DO NOT BEAR THE SEAL OF THE ARCHITECTURAL OR ENGINEERING PRACTICE.

bgr CONSULTING ENGINEERS

#	DATE	DESCRIPTION

USKC EARLY CHILDHOOD EXHIBITS

SCIENCE CITY @ UNION STATION
30 W. PERSHING RD
KANSAS CITY, MO 64108

CONSTRUCTION DOCUMENTS

Original Size: 1 1/2" Drawing may have been reduced.
0" 1"

INTERIOR DETAILS - CREATIVE CORNER

DATE: 07/03/19
DRAWN: PGAV
CHECKED: PGAV
PGAV #: 53494-00
CLIENT #:
SHEET #:

A815

7/2/2019 2:32:31 PM C:\Users\chris.bush\Desktop\53494-00_USKC_Children Exhibits_dbush\Revit\my1.rvt

ROUGH OPENING LEGEND

ITEM	HEIGHT	WIDTH	DEPTH
FUNHOUSE MIRRORS -	3'-1"	1'-7"	4"
BOOKCASE -	2'-11 1/2"	1'-7 1/2"	4"
BALLS AND TUBES -			
A -	2'-1 1/2"	1'-5"	3"
B -	2'-1 1/2"	1'-5"	3"
C -	2'-1 1/2"	1'-5"	3"
D -	2'-6 1/2"	1'-5"	3"

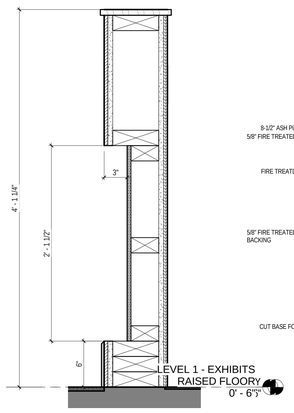

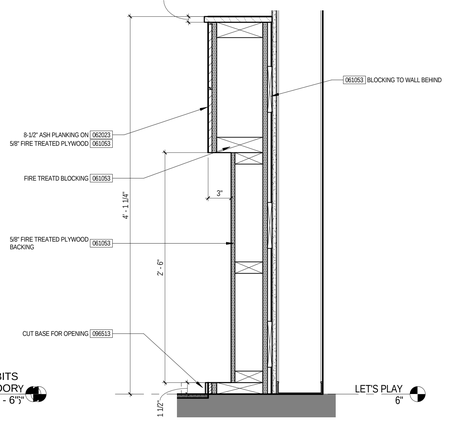

DETAIL @ BALL AND TUBES D6
1 1/2" = 1'-0"

DETAIL @ BALL AND TUBES LARGE D5
1 1/2" = 1'-0"

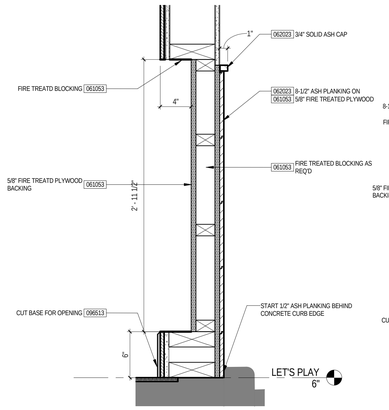

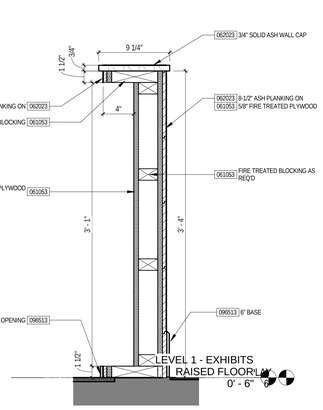

DETAIL @ BOOKCASE SECTION B6
1 1/2" = 1'-0"

DETAIL @ FUNHOUSE MIRROR B5
1 1/2" = 1'-0"

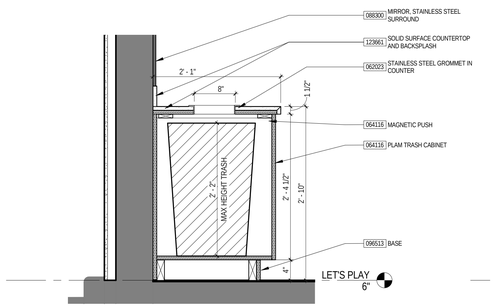

DETAIL @ MOTHER'S ROOM TRASH E4
1" = 1'-0"

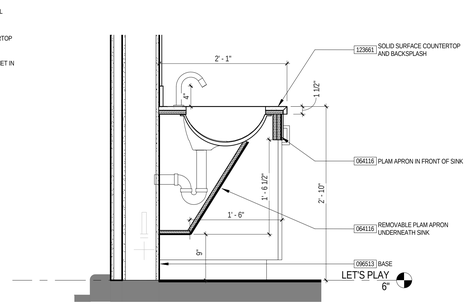

SECTION @ MOTHER'S ROOM SINK E2
1" = 1'-0"

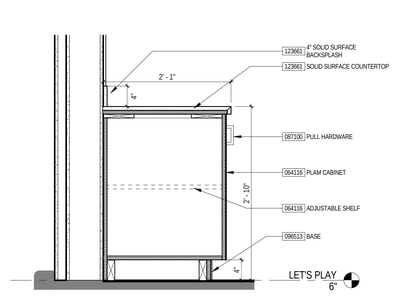

DETAIL @ MOTHER'S ROOM CASEWORK E1
1" = 1'-0"

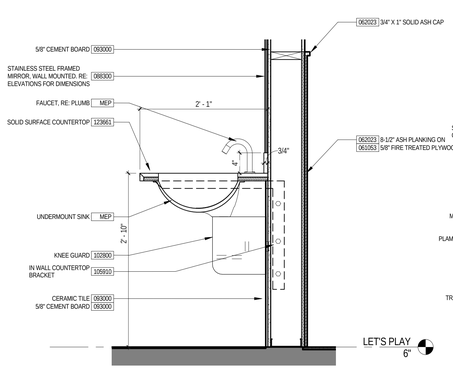

DETAIL @ RESTROOM SINK UPPER D4
1" = 1'-0"

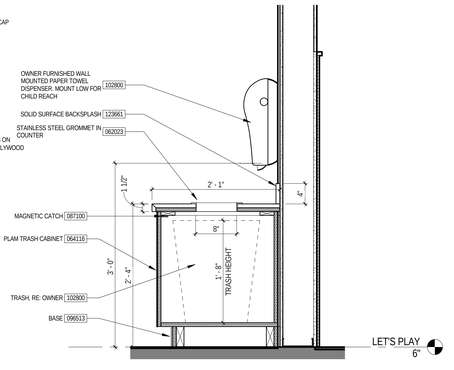

DETAIL @ TRASH ENCLOSURE RESTROOM D2
1" = 1'-0"

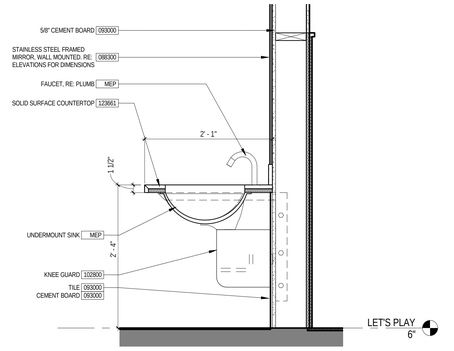

SECTION @ RESTROOM SINK LOW D1
1" = 1'-0"

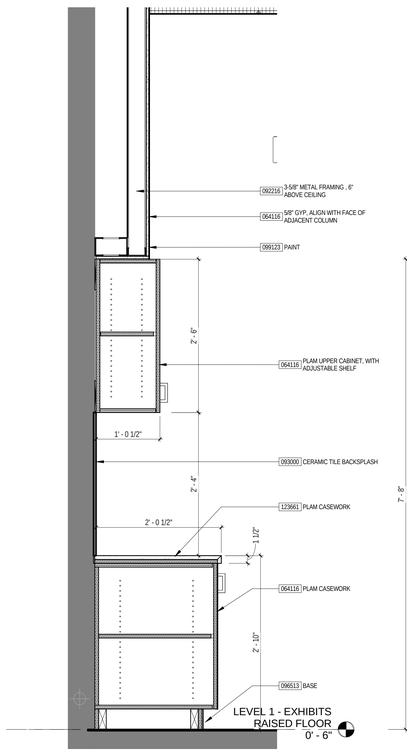

DETAIL @ LET'S PLAY CABINETS A4
1" = 1'-0"

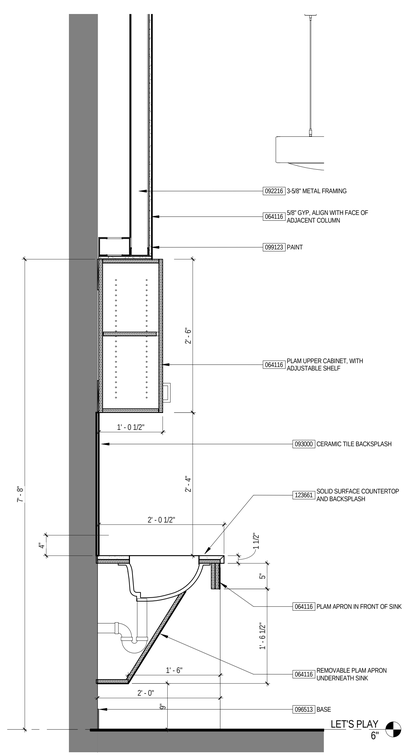

DETAIL @ LET'S PLAY - SINK A3
1" = 1'-0"

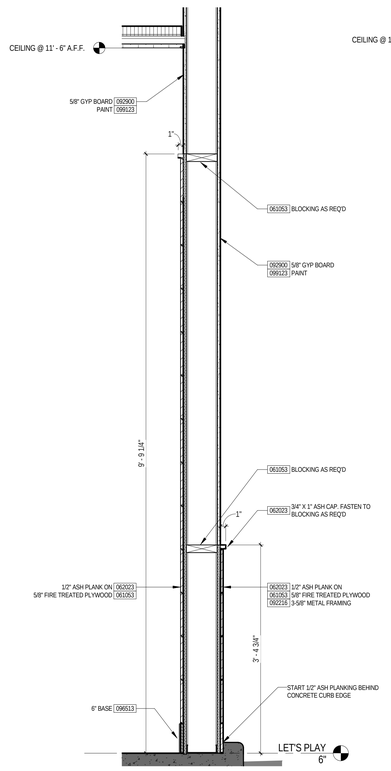

SECTION @ LET'S PLAY EXTERIOR WALL A2
1" = 1'-0"

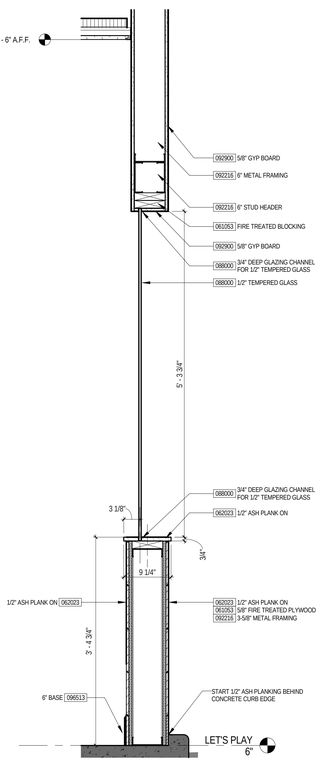

SECTION @ LET'S PLAY GLASS A1
1" = 1'-0"

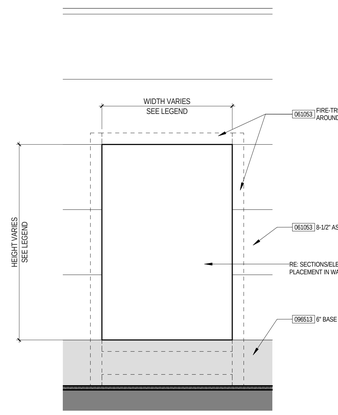

DETAIL @ OPENING ELEVATION A6
1 1/2" = 1'-0"

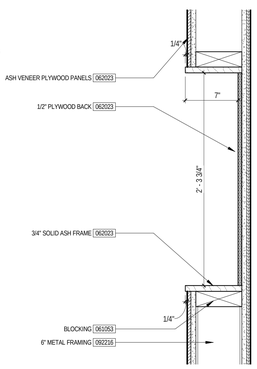

DETAIL @ MARBLE MAZE CUTOUT A5
1 1/2" = 1'-0"

PGAV ARCHITECTS
PECKHAM GUYTON ALBERS & VIETS, INC.
1900 W. 47th Place, #300, Westwood, KS 66205
(913) 362-6500
www.PGAV.COM

Copyright ©2019

THE SEAL AND SIGNATURE APPLY ONLY TO THE DOCUMENT TO WHICH THEY ARE AFFIXED AND DO NOT EXTEND TO ANY REVISIONS RESPONSIBILITY FOR ALL OTHER PLANS, SPECIFICATIONS, ESTIMATES, REPORTS, OR OTHER DOCUMENTS OR INSTRUMENTS RELATED TO THE PROJECT PREPARED BY OTHERS OR ANY PART OF THE ARCHITECTURAL OR ENGINEERING PROJECT.

bgr CONSULTING ENGINEERS

#	DATE	DESCRIPTION

USKC EARLY CHILDHOOD EXHIBITS

SCIENCE CITY @ UNION STATION
30 W. PERSHING RD
KANSAS CITY, MO 64108

CONSTRUCTION DOCUMENTS

Original Size: 1 1/2" Drawing may have been reduced.

0" 1"

INTERIOR DETAILS - LET'S PLAY

DATE:	07/03/19
DRAWN: PGAV	CHECKED: PGAV
PGAV #	CLIENT #
53494-00	
SHEET #:	A817

C:\Users\chris.bucchi\Desktop\53494-00_USKC_Childrens-Exhibits_cbucchi(Recovery).rvt
7/3/2019 2:22:41 PM

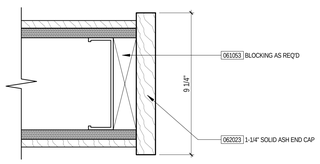

END CAP @ ASH VENEER WALLS, TYP.

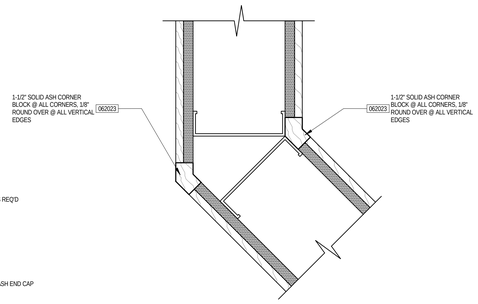

CORNER DETAIL @ ASH VENEER WALLS, TYP.

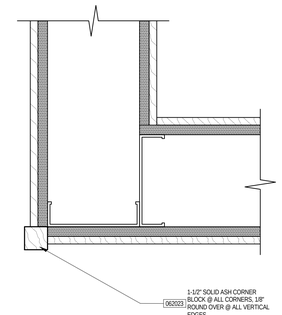

CORNER DETAIL @ ASH VENEER WALLS, TYP.

WOOD TRIM DETAILS AT LET'S PLAY D2
3" = 1'-0"

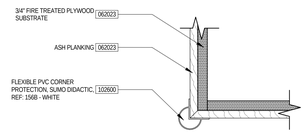

CORNER GUARD - DETAIL D1
3" = 1'-0"

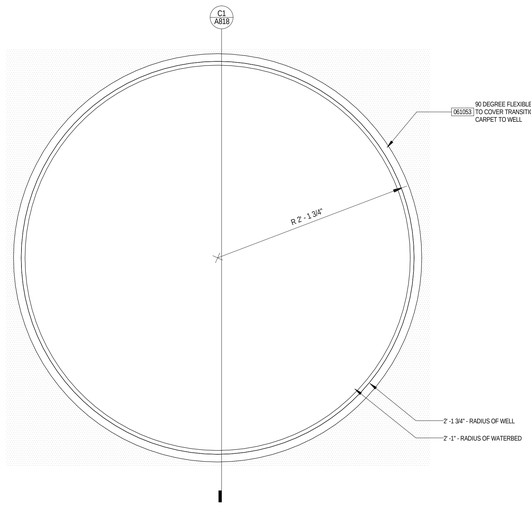

ENLARGED PLAN - WATERBED CUTOUT C5
1 1/2" = 1'-0"

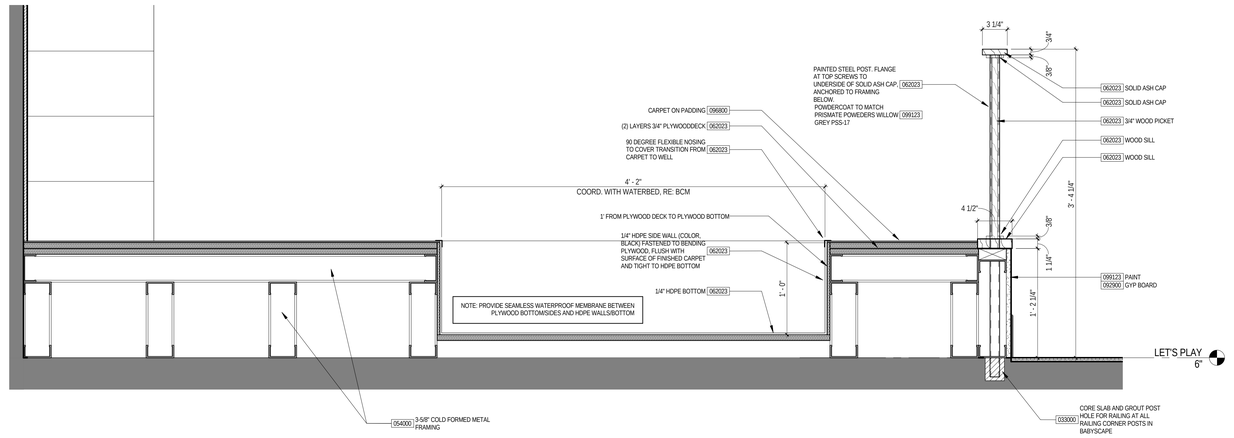

DETAIL @ BABYSCAPE RAILING/PLATFORM C1
1 1/2" = 1'-0"

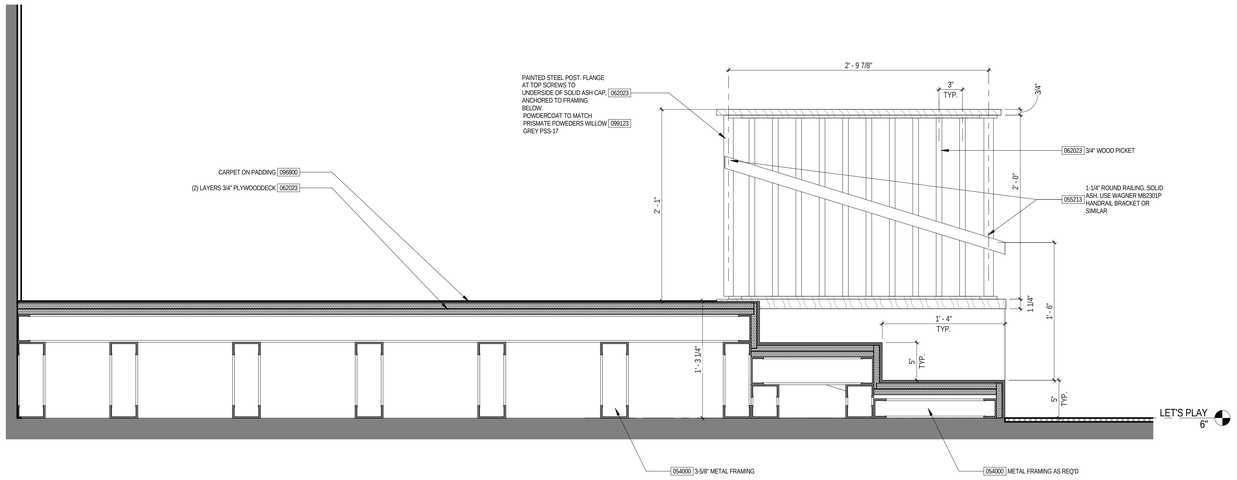

DETAIL @ BABYSCAPE STAIR/PLATFORM A1
1 1/2" = 1'-0"

PGAV ARCHITECTS
PECKHAM GUYTON ALBERS & VIETS, INC.
1900 W 47th Place, #300, Westwood, KS 66205
(913) 362-6500
www.PGAV.COM
Copyright ©2019

STATE OF MISSOURI
MICHAEL ALAN SCHAADT
NUMBER A-6073
REGISTERED ARCHITECT

THE SEAL AND SIGNATURE APPLY ONLY TO THE DOCUMENT TO WHICH THEY ARE AFFIXED AND DO NOT EXTEND TO ANY OTHER RESPONSIBILITY FOR ALL OTHER PLANS, SPECIFICATIONS, ESTIMATES, REPORTS, OR OTHER DOCUMENTS OR INSTRUMENTS, RELATIVE TO OR INTENDED FOR USE ON ANY PART OR PARTS OF THE ARCHITECTURAL OR ENGINEERING PROJECT.

bgr CONSULTING ENGINEERS

#	DATE	DESCRIPTION

USKC EARLY CHILDHOOD EXHIBITS

SCIENCE CITY @ UNION STATION
30 W. PERSHING RD
KANSAS CITY, MO 64108

CONSTRUCTION DOCUMENTS

Original Size: 1 1/2" Drawing may have been reduced.
0" 1"

INTERIOR DETAILS - LET'S PLAY

DATE: 07/03/19
DRAWN: PGAV
CHECKED: PGAV
PGAV #: 53494-00
CLIENT #:
SHEET #: A818

7/2/2019 2:32:45 PM C:\Users\chris.bucchi\Desktop\53494-00_USKC_Children+ Exhibits_chrisnt\Revit\wy1.rvt

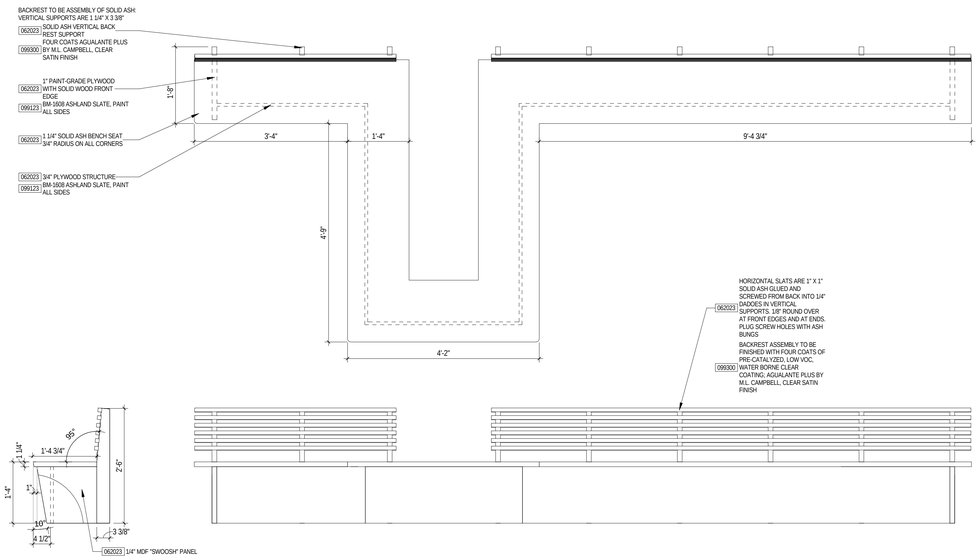

1 BENCH B7

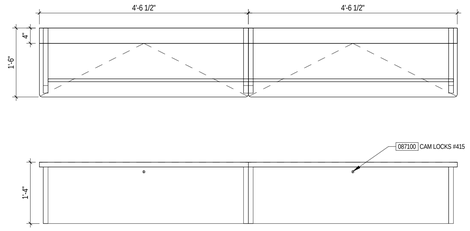

2 BENCH B6

3 / 7 BENCH B1, B2

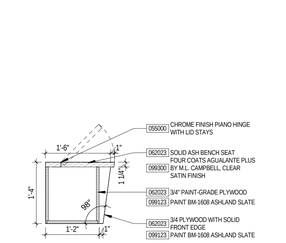

5 BENCH B3

TYP. SECTION (BENCH B1, B2, B3)

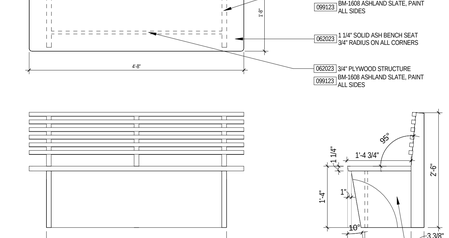

4 BENCH B8

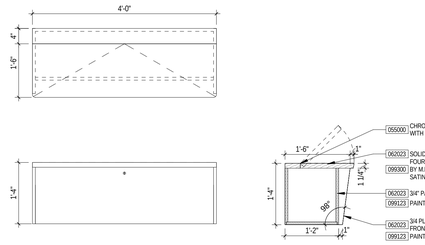

6 BENCH B5 - STORAGE BENCH

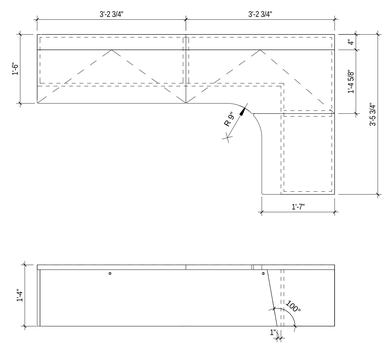

10 BENCH B4 - STORAGE BENCH

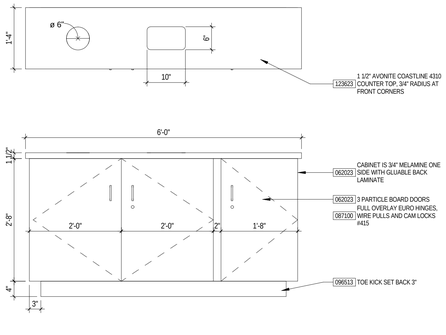

8 TRASH AND RECYCLING CABINET

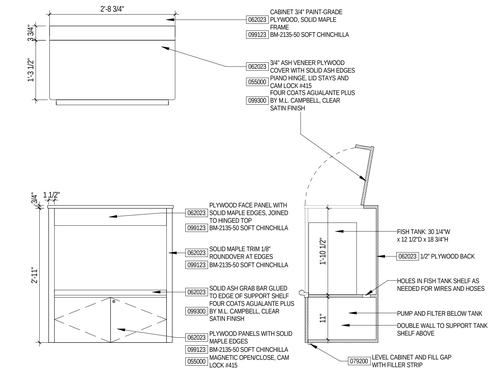

11 FISH TANK - BABYSCAPE

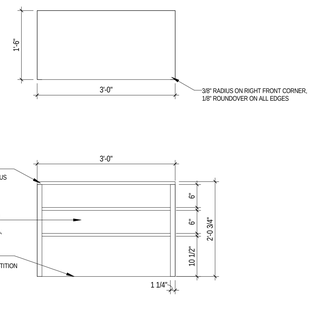

9 SHOE SHELF

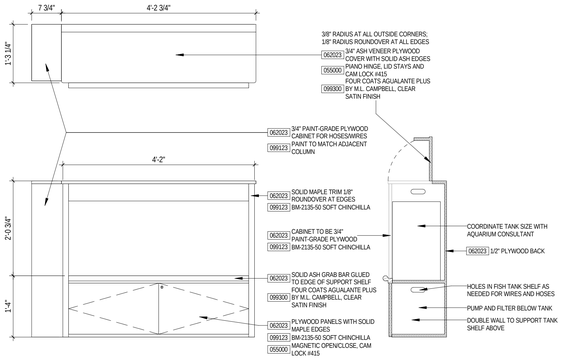

12 FISH TANK - KITCHEN

LET'S PLAY - CASEWORK DETAILS
3/4" = 1'-0" **A1**

PGAV ARCHITECTS
PECKHAM GUYTON ALBERS & VIETS, INC.
1900 W. 47th Place, #300, Westwood, KS 66205
(913) 362-6500
www.PGAV.COM
Copyright ©2019

STATE OF MISSOURI
MICHAEL ALAN SCHAADT
NUMBER A-6073
ARCHITECT

THE SEAL AND SIGNATURE APPLY ONLY TO THE DOCUMENT TO WHICH IT IS AFFIXED. THE ARCHITECT HAS NO RESPONSIBILITY FOR ALL OTHER PLANS, SPECIFICATIONS, ESTIMATES, REPORTS, OR OTHER DOCUMENTS OR INSTRUMENTS RELATIVE TO OR EXTENDING BEYOND THE DESCRIBED PARTS OF THE ARCHITECTURAL OR ENGINEERING PROJECT.

bgr CONSULTING ENGINEERS

#	DATE	DESCRIPTION

USKC EARLY CHILDHOOD EXHIBITS

SCIENCE CITY @ UNION STATION
30 W. PERSHING RD
KANSAS CITY, MO 64108

CONSTRUCTION DOCUMENTS

Original Size: 1 1/2" Drawing may have been reduced.
0" 1"

INTERIOR DETAILS - LET'S PLAY MILLWORK

DATE: 07/03/19
DRAWN: PGAV
CHECKED: PGAV
PGAV # 53494-00
CLIENT #
SHEET #: A819

C:\Users\chris.bush\Desktop\53494-00_USKC_Children's Exhibits_chbush(Recovery).rvt
7/3/2019 2:22:46 PM

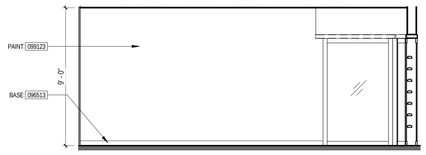

302 MODEL TRAIN ROOM - WEST **E4**
1/4" = 1'-0"

302 MODEL TRAIN ROOM - EAST **E2**
1/4" = 1'-0"

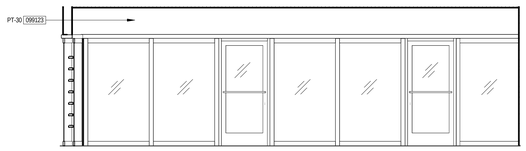

302 MODEL TRAIN ROOM - NORTH **E1**
1/4" = 1'-0"

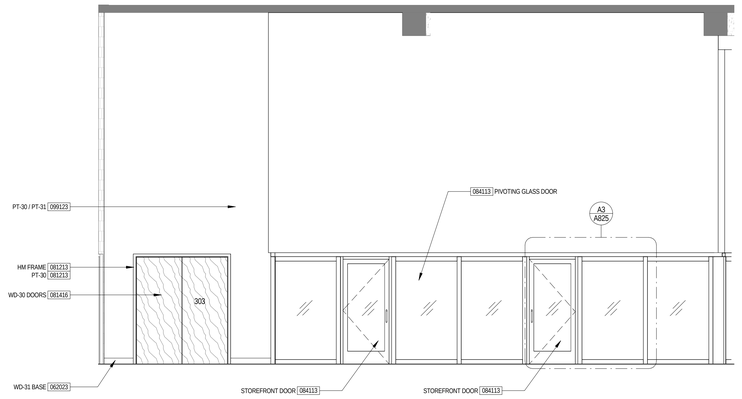

TRAINS - GLASS WALL SOUTH **D2**
1/4" = 1'-0"

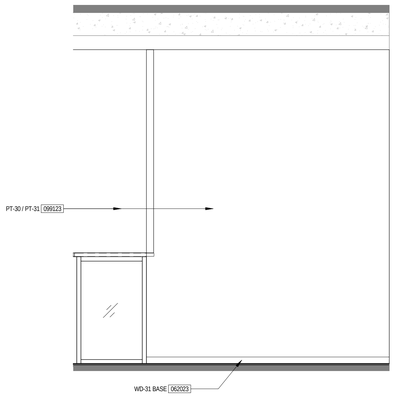

TRAINS - GLASS WALL EAST **D1**
1/4" = 1'-0"

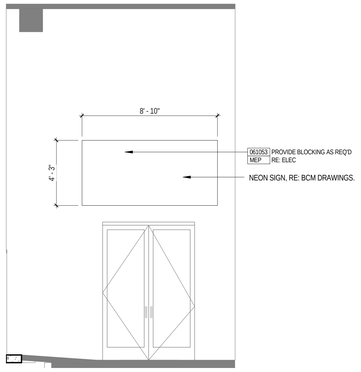

SOUTH ENTRY - ALL ABOARD **C4**
1/4" = 1'-0"

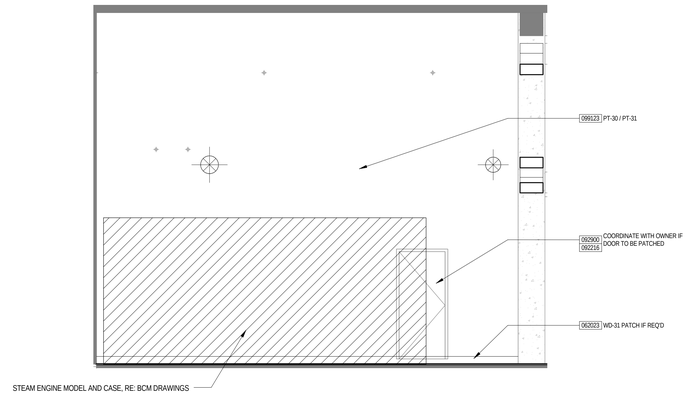

301 ALL ABOARD EXHIBIT HALL - WEST **C1**
1/4" = 1'-0"

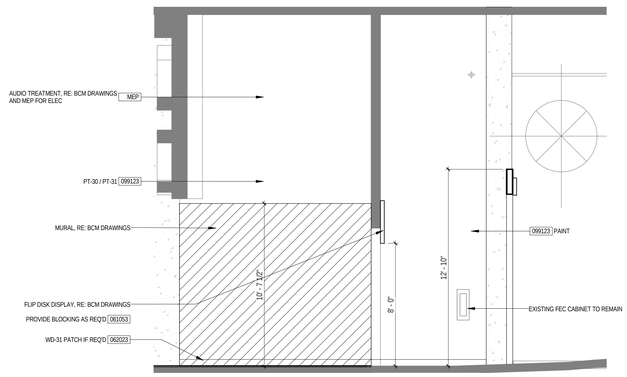

300 ENTRY - SOUTH **A4**
1/4" = 1'-0"

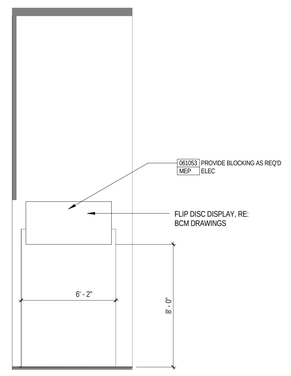

300 ENTRY - EAST 1 **A2**
1/4" = 1'-0"

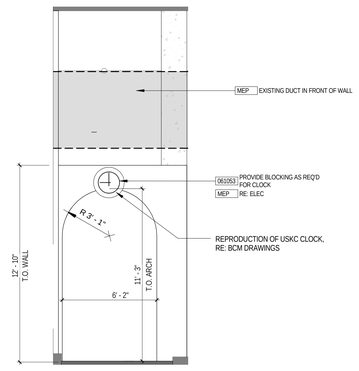

300 ENTRY - EAST **A1**
1/4" = 1'-0"

PGAV ARCHITECTS
PECKHAM GUYTON ALBERS & VIETS, INC.
1900 W 47th Place, #300, Westwood, KS 66205
(913) 362-6500 www.PGAV.COM
Copyright ©2019

STATE OF MISSOURI
MICHAEL ALAN SCHAADT
NUMBER A-6037
ARCHITECT

THE SEAL AND SIGNATURE APPLY ONLY TO THE DOCUMENT TO WHICH THEY ARE AFFIXED AND SHALL NOT BE RESPONSIBLE FOR ALL OTHER PLANS, SPECIFICATIONS, ESTIMATES, REPORTS, OR OTHER DOCUMENTS OR INSTRUMENTS RELATING TO OR INTENDED TO BE USED FOR ANY PART OR PARTS OF THE ARCHITECTURAL OR ENGINEERING PROJECT.

bgr CONSULTING ENGINEERS

#	DATE	DESCRIPTION

USKC EARLY CHILDHOOD EXHIBITS

SCIENCE CITY @ UNION STATION
30 W. PERSHING RD
KANSAS CITY, MO 64108

CONSTRUCTION DOCUMENTS

Original Size: 1 1/2" Drawing may have been reduced.
0" 1"

INTERIOR ELEVATIONS - ALL ABOARD

DATE: 07/03/19
DRAWN: PGAV
CHECKED: PGAV
PGAV # 53494-00
CLIENT #
SHEET #: A820

C:\Users\chris.busch\Desktop\53494-00_USKC_Childrens-Exhibits_cbusch(Recovery).rvt
7/3/2019 2:32:51 PM

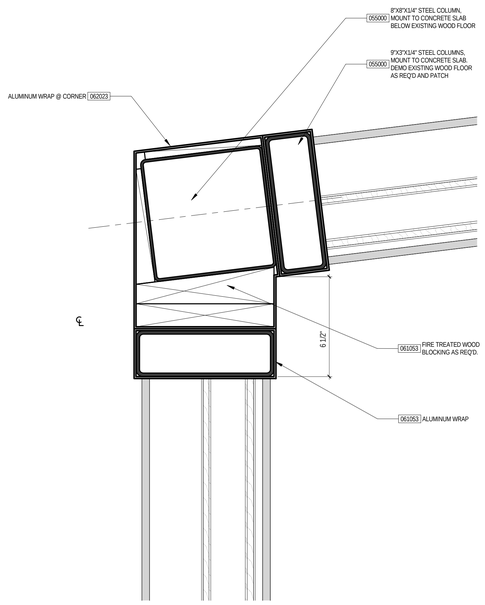

DETAIL @ DISPLAY WALL CORNER **C6**
3" = 1'-0"

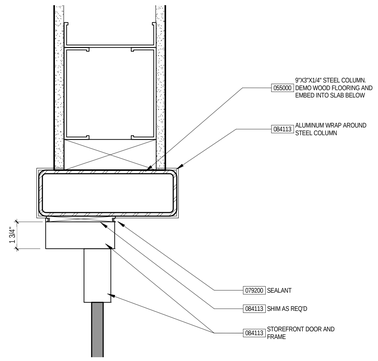

DETAIL @ DOOR HEAD ALL ABOARD **E4**
3" = 1'-0"

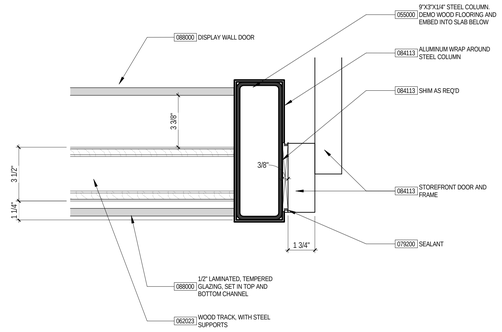

DETAIL @ DISPLAY WALL DOOR JAMB **C4**
3" = 1'-0"

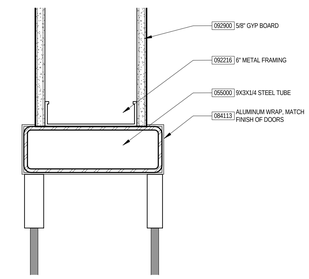

DETAIL @ DISPLAY WALL HEAD **E1**
3" = 1'-0"

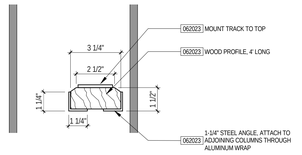

DETAIL @ DISPLAY WALL TRACK **D3**
3" = 1'-0"

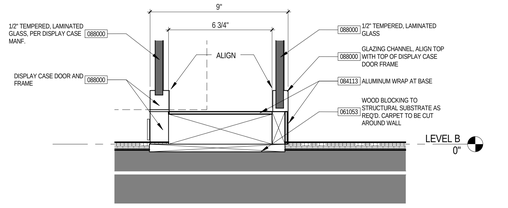

DETAIL @ DISPLAY WALL SILL **D1**
3" = 1'-0"

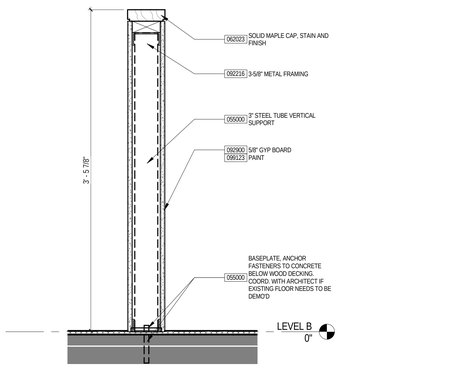

DETAIL @ LOW WALL ALL ABOARD **A6**
1 1/2" = 1'-0"

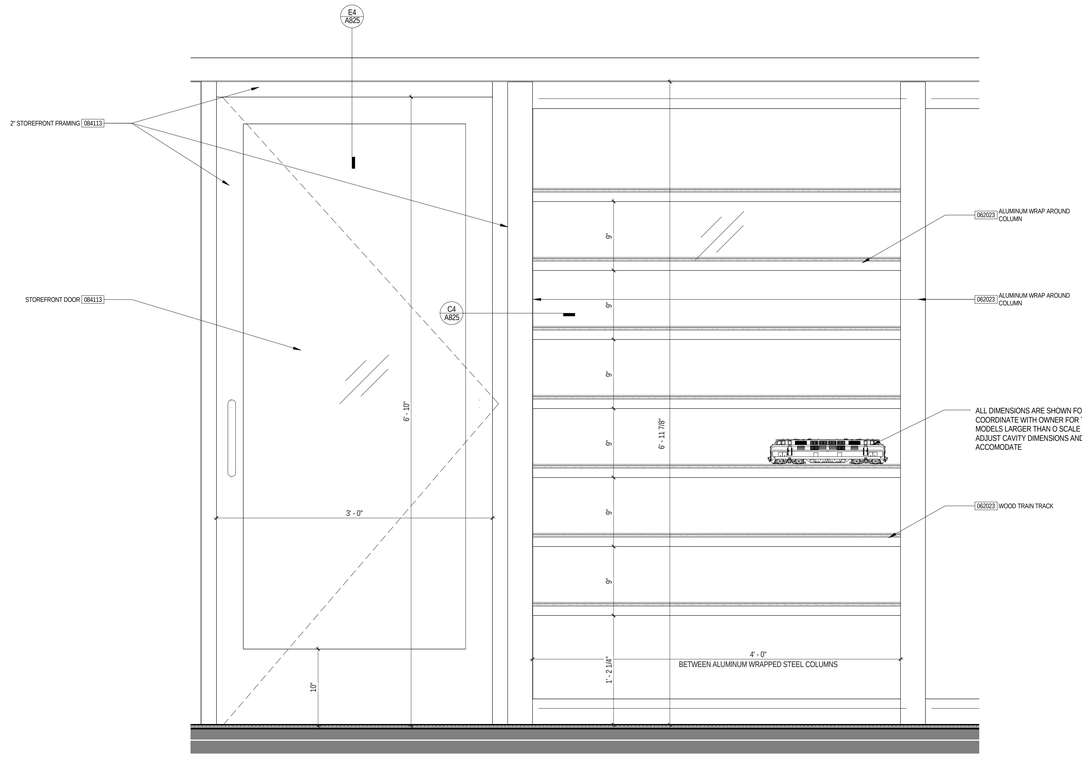

GLASS WALL DOOR ELEVATION - TYP. **A3**
1 1/2" = 1'-0"

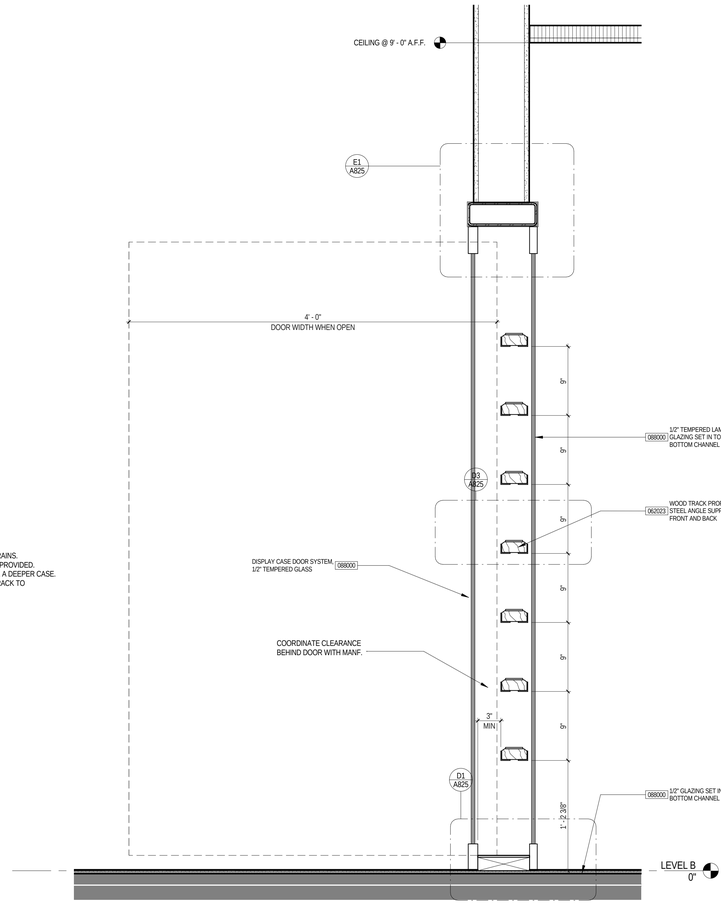

DETAIL @ TRAIN DISPLAY SECTION **A1**
1 1/2" = 1'-0"

PGAV ARCHITECTS
PECKHAM GUYTON ALBERS & VIETS, INC.
1900 W. 47th Place, #300, Westwood, KS 66205
(913) 362-6500
www.PGAV.COM
Copyright ©2019

STATE OF MISSOURI
MICHAEL ALAN SCHAADT
NUMBER A-6673
REGISTERED ARCHITECT

THE SEAL AND SIGNATURE APPLY ONLY TO THE DOCUMENT TO WHICH THEY ARE AFFIXED. THE ARCHITECT ASSUMES NO RESPONSIBILITY FOR ALL OTHER PLANS, SPECIFICATIONS, ESTIMATES, REPORTS, OR OTHER DOCUMENTS OR INSTRUMENTS RELATIVE TO THE PROJECT WHICH DO NOT BEAR THE ORIGINAL OF THE ARCHITECTURAL OR ENGINEERING PRECINCT.

bgr CONSULTING ENGINEERS

#	DATE	DESCRIPTION

USKC EARLY CHILDHOOD EXHIBITS

SCIENCE CITY @ UNION STATION
30 W. PERSHING RD
KANSAS CITY, MO 64108

CONSTRUCTION DOCUMENTS

Original Size: 1 1/2" Drawing may have been reduced.
0" 1"

INTERIOR DETAILS - ALL ABOARD

DATE: 07/03/19
DRAWN: PGAV
CHECKED: PGAV
PGAV #: 53494-00
CLIENT #:
SHEET #: **A825**

C:\Users\chris.bush\Desktop\53494-00_USKC_Childrens-Exhibits_chrisH(Recovery).rvt
7/3/2019 2:32:56 PM

PGAV

FINISH SCHEDULE - CREATIVE CORNER

NUMBER	NAME	NORTH WALL	EAST WALL	SOUTH WALL	WEST WALL	FLOOR	BASE	CEILING	COMMENTS
--	EXTERIOR WALLS	PT-20	PT-20 / MURAL	PT-20 / MURAL	-	-	RB-20	-	ANY NON-MURAL SURFACE TO BE PAINTED PT-20
200	ENTRY	PT-20 / GLASS	-	PT-20 / MURAL	-	SC-20	RB-20	ACT-1	
201	PAINT ROOM	PT-20 / GLASS	PT-20 / GLASS	PT-20 / GLASS	CT-20	RS-20	RS-20-B	ACT-1	CONTINUE RS-20 W/ WATERPROOFING LAYER UNDERNEATH ONTO WALL 4" UP, CAP WITH TRIM PIECE.
202	SAND STUDIO	PT-20	PT-20 / MURAL	PT-20 / MURAL	PT-21	RS-20 / RF-21	RS-20-B	ACT-1	MATS DUCKTILE @ ENTRY, CONTINUE RS-20 W/ WATERPROOFING LAYER UNDERNEATH ONTO WALL 4" UP, CAP WITH TRIM PIECE
203	TODDLER EXPLORATION AREA	-	PT-20	PT-20	PT-20 / MURAL	SC-20	RB-20	ACT-1	CT-20 TILE - RE: ELEV.
204	PROGRAM SPACE	PT-20 / MURAL	PT-20	-	PT-20	SC-20	RB-20	ACT-1	CT-20 TILE - RE: ELEV
205	STAFF PREP AREA	PT-20	PT-20	PT-20 / MURAL	PT-20	SC-20	RB-20	ACT-1	

FINISH SCHEDULE - LET'S PLAY

NUMBER	NAME	NORTH WALL	EAST WALL	SOUTH WALL	WEST WALL	FLOOR	BASE	CEILING	COMMENTS
-	EXTERIOR WALLS	PT-10	PT-10 / WD-10	PT-10	-	-	-	-	SEE ELEV. FOR EXTENT OF WD-10, ALL OTHER WALLS SURFACES TO BE PT-10
101	ENTRY	PT-10 / WD-10	PT-10 / WD-10	PT-10 / WD-10	PT-10 / WD-10	RS-10 / CPT-10	RB-10	ACT-1	
102	BABYSCAPE	PT-10 / WD-10	PT-10 / WD-10	PT-10 / WD-10	PT-10 / WD-10	RS-10 / CPT-11	RB-10	ACT-1	
103	PRETEND PLAY	PT-10	PT-10 / WD-10	PT-10 / WD-10	PT-10 / WD-10	RE:-------	RB-10	ACT-1	RFT-10 IN CAVE, CPT-12 ON PLATFORM (BY EXHIBITRY), L-1 BTWN HOUSE / BENCH
104	GROSS MOTOR	PT-10	PT-10 / WD-10	PT-10 / WD-10	PT-10	CPT-10 / LVT-10	RB-10	ACT-1	
105	AIR PLAY	PT-10 / WD-10	PT-10 / WD-10	PT-10 / WD-10	PT-10	CPT-10	RB-10	ACT-1	
106	KITCHEN	PT-10 / WD-10	PT-10	PT-10	PT-10	RS-10	RB-10	ACT-1	
107	RESTROOM	CT-10	CT-10	CT-10	CT-10	RS-10	RS-10-B	ACT-1	(NON-SLIP FLOOR SURFACE), RS-10 INTEGRAL BASE, RUN UP 6" ON WALL, PROVIDE CAP TRIM
108	MOTHER'S ROOM	PT-10	PT-10	PT-10	PT-10	RS-10	RB-10	ACT-1	
109	STORAGE	PT-10	PT-10	PT-10	PT-10	RS-10	RB-10	GWB	PAINT CEILING WHITE
110	STORAGE	PT-10	PT-10	PT-10	PT-10	RS-10	RB-10	GWB	PAINT CEILING WHITE

FINISH SCHEDULE - ALL ABOARD

NUMBER	NAME	NORTH WALL	EAST WALL	SOUTH WALL	WEST WALL	FLOOR	BASE	CEILING	COMMENTS
300	ENTRY	PT-30 / PT-31	PT-30 / PT-31	PT-30 / PT-31	PT-30 / PT-31	ETR	ETR	-	WOOD BASE TO REMAIN, MATCH BASE IF REQ'D
301	ALL ABOARD EXHIBIT HALL	PT-30 / PT-31	PT-30 / PT-31	PT-30 / PT-31	PT-30 / PT-31	RE: DWGS	ETR / MATCH	-	WOOD BASE TO REMAIN, MATCH BASE IF REQ'D
302	MODEL TRAIN ROOM	PT-30 / PT-31	PT-30 / PT-31	PT-30 / PT-31	PT-30 / PT-31	CPT-30	MATCH	ACT-1	MATCH EXISTING WOOD BASE
303	SERVICE CORRIDOR	PT-30 / PT-31	PT-30 / PT-31	PT-30 / PT-31	PT-30 / PT-31	RS-31	ETR / MATCH	-	WOOD BASE TO REMAIN, MATCH BASE IF REQ'D

MATERIAL LEGEND GUIDE

MATERIALS DENOTED WITH-

-10's = LET'S PLAY MATERIALS

-20's = CREATIVE CORNER MATERIALS

-30's = ALL ABOARD MATERIALS

ACT-1 USED THROUGHOUT ALL EXHIBITS

BCM MATERIAL REFERENCE SHOWN ON SCHEDULE FOR INFORMATION PURPOSES

MATERIAL FINISH LEGEND - ALL EXHIBITS

SPECIFICATION	MATERIAL	DESCRIPTION	MANUF / SOURCE	PATTERN / TYPE	NAME / COLOR	FINISH / CONTENT	_SIZE	REMARKS	EXHIBIT	BCM REFERENCE
-										
-	ETR	EXISTING TO REMAIN							LET'S PLAY	
-	ETR	EXISTING TO REMAIN							CREATIVE CORNER	
-	GWB	GYPSUM WALL BOARD; PAINTED							LET'S PLAY	
033000										
033000	SC-20	POLISHED AND SEALED CONCRETE				SEALED			CREATIVE CORNER	F1
062023										
062023	WD-10	WOOD TRIM		ASH		RE: SPEC	SEE DWG		LET'S PLAY	
062023	WD-11	WOOD PLANKING		ASH		ASH VENEER ON 1/2" PLYWOOD, RE: SPEC	8-1/2" PLANKS, SEE DWG	ASH PLANKING APPLIED TO WALLS	LET'S PLAY	
062023	WD-20	WOOD TRIM		MAPLE		RE: SPEC	SEE DWG		CREATIVE CORNER	
062023	WD-30	WOOD TRIM		MAPLE		RE: SPEC	SEE DWG		ALL ABOARD	
062023	WD-31	WOOD BASE - MATCH EXISTING		MATCH EXISTING		RE: SPEC	SEE DWG		ALL ABOARD	
064116										
064116	PL-10	CABINET LAMINATE	WILSONART	GLACIER BLUE					LET'S PLAY	PL-1
081416										
081416	WD-10	WOOD DOOR FINISH	TBD	ASH		RE: SPEC	SEE DWG		LET'S PLAY	
081416	WD-20	WOOD DOOR FINISH	TBD	MAPLE		RE: SPEC	SEE DWG		CREATIVE CORNER	
081416	WD-30	WOOD DOOR FINISH	TBD	MAPLE (MATCH EXISTING)		RE: SPEC	SEE DWG		ALL ABOARD	
093000										
093000	CT-10	CERAMIC TILE	TONALITE	NATURE SERIES	MILK 40		4" X 16"	https://www.tonalite.it/en/collezione/nature/	LET'S PLAY	
093000	CT-20	CERAMIC TILE	DALTILE		ARTIC WHITE		4.25"X4.25"	GREY GROUT, SEE BCM DRAWINGS FOR LOCATIONS AT CB2, COVED BASE ON WALLS	CREATIVE CORNER	
095113										
095113	ACT-1	ACOUSTIC TILE CEILING	ARMSTRONG	ULTIMATE BEVELED TEGULAR / 1902	WHITE		24"X24"X3/4"	9/16" GRID, THROUGHOUT ALL EXHIBITS	ALL EXHIBITS	
096513										
096513	RB-10	6" VINYL WALL BASE	JOHNSONITE/TARKETT	S102235-20-WB0004-CBT6 (TOELESS), S102235-20-WB0004-CB6 (TOED)	20 CHARCOAL		6"	RUBBER BASE THROUGHOUT LET'S PLAY (TOED EVERYWHERE EXPECT CARPETED AREAS)	LET'S PLAY	RB-1
096513	RB-20	WALL BASE 1	TARKETT/JOHNSONITE	#55	SILVER GREY	VINYL	4"		CREATIVE CORNER	WB 1
096513	RT-10	TRANSITION STRIP FOR LINOLEUM	TARKETT	T-MOULDING	CD-20-C 20 CHARCOAL				LET'S PLAY	F4-T
096516										
096516	RS-10	SHEET RUBBER	MANNINGTON	COMMERCIAL COLORFIELDS THERMOSET RUBBER TYPE TS	890 MORAINE		44'X50' SHEET		LET'S PLAY	F1
096516	RS-10-B	RS-10 INTEGRAL WALL BASE	MANNINGTON		890 MORAINE		6"	INTEGRAL WALL BASE, MANUFACTURER SPECIFIED TERMINATION STRIP AT TOP OF BASE	LET'S PLAY	
096516	RS-20	VINYL FLOORING	ALTRO FLOORING		STREETLIGHT			ON WATERPROOF MEMBRANE, MEMBRANE TO CONTINUE UP WALL BEHIND 4" INTEGRAL BASE	CREATIVE CORNER	F2
096516	RS-20 - B	RS-20 INTEGRAL WALL BASE	ALTRO FLOORING		STREETLIGHT		4"	INTEGRAL WALL BASE, MANUFACTURER SPECIFIED TERMINATION STRIP AT TOP OF BASE	CREATIVE CORNER	WB 2
096516	RS-30	RUBBER FALL SURFACE	ROBERTSON TOT-TURF	SIMULATED SAND	50/50 MIX OF CREAM AND BEIGE GRANULES	BONDED RUBBER	2" THICKNESS	TAPERED EDGE AT PERIMETER	ALL ABOARD	F1
096516	RS-31	RESILIENT FLOORING	MANNINGTON	TERRENE	BASALTINA, 18023				ALL ABOARD	F2
096519										
096519	LVT-10	VINYL TILE	MANNINGTON	COLOR ANCHOR LVT	STRIDE LONDON FOG C139		12"X24"	ON GROSS MOTOR RAISED PLATFORM	LET'S PLAY	F2
096519	RFT-10	RUBBER FLOOR TILE	ROPPE	995 HAMMERED DESIGN	123 CHARCOAL			INSIDE CAVE	LET'S PLAY	F3
096519	RFT-20	DRAINAGE TILE	MATS	DUCK TILE	SAND		15"X15"	DRAINAGE TILE AT ENTRY TO SAND STUDIO, PROVIDE TRANSITION TO ADJACENT VINYL FLOORING	CREATIVE CORNER	
096543										
096543	L-10	WATERJET CUT LINOLEUM	MARMOLEUM BY FORBO		COLOR 1: MCT-767 RUST; COLOR 2: MCT-795 BUTTER; COLOR 3: MCT-3050 WHITE BIRCH)			INLAID IN CARPET IN PRETEND PLAY; SEE NOTE ON BCM DRAWING, SHEET EX0.18	LET'S PLAY	F4
096700										
096700	V-30	VINYL FLOOR GRAPHIC WITH EPOXY COATING						RAILROAD TRACK FLOOR DECAL, REFERENCE BCM DRAWINGS AND GRAPHICS PACKAGE	ALL ABOARD	F3
096700	V-31	VINYL CHECKERBOARD PATTERN						VINYL CHECKBOARD PATTERN, REFERENCE BCM DRAWINGS AND GRAPHICS PACKAGE	ALL ABOARD	F5
096700	V-32	DIAMOND PLATE VINYL						DIAMOND PLATE VINYL, REFERENCE BCM DRAWINGS AND GRAPHICS PACKAGE	ALL ABOARD	F4
096800										
096800	CPT-10	CARPET COLOR 1	MOHAWK GROUP	FACULTY REMIX GL154	575 RENEWED BLUE				LET'S PLAY	C1
096800	CPT-11	CARPET 1 WITH CARPET PAD	MOHAWK GROUP	FACULTY REMIX GL154	575 RENEWED BLUE			INSTALL OVER CARPET PAD	LET'S PLAY	C2
096800	CPT-12	CARPET 2	MOHAWK GROUP	FACULTY REMIX GL154	665 REFRESHED GREEN			PRETEND PLAY ONLY	LET'S PLAY	C3
096800	CPT-30	CARPET	MANNINGTON	EVERYWHERE III	SHARKSKIN, 1122				ALL ABOARD	C1
096800	CPT-31	CARPET	MANNINGTON	EVERYWHERE III	KASHMIRE, 4307				ALL ABOARD	C2
099123										
099123	A	SHEEN DESIGNATION	BENJAMIN MOORE			EGGSHELL		FIELD PAINT FINISH	ALL EXHIBITS	
099123	B	SHEEN DESIGNATION	BENJAMIN MOORE			SEMIGLOSS		HM DOORS & FRAMES	ALL EXHIBITS	
099123	C	SHEEN DESIGNATION	BENJAMIN MOORE			EPOXY		RESTROOMS AND KITCHEN	ALL EXHIBITS	
099123	D	SHEEN DESIGNATION	BENJAMIN MOORE			FLAT		CEILINGS & SOFFITS	ALL EXHIBITS	
099123	PT-10	PAINT - WALLS & COLUMNS	BENJAMIN MOORE	ADVANCE AURA	BM-1625 BLUE LACE	EGGSHELL		PAINT FOR WALLS AND COLUMNS	LET'S PLAY	P1
099123	PT-11	PAINT - CASEWORK	BENJAMIN MOORE		SOFT CHINCHILLA 2135-50	EGGSHELL		PAINT FOR CASEWORK	LET'S PLAY	P2
099123	PT-12	PAINT	BENJAMIN MOORE			EGGSHELL		PAINT EXISTING STRUCTURE, DUCTWORK, PIPE AND CONDUIT	LET'S PLAY	P3
099123	PT-20	PAINT	BENJAMIN MOORE		MOONSHINE, #OC-56	EGGSHELL		(2) COATS OVER PRIMER, SEE BCM DRAWINGS FOR LOCATIONS AT GWB 1	CREATIVE CORNER	P1
099123	PT-21	PAINT	BENJAMIN MOORE		GULL WING GREY, #2134-50	EGGSHELL		(2) COATS OVER PRIMER, SEE BCM DRAWINGS FOR LOCATIONS AT GWB 2	CREATIVE CORNER	P2
099123	PT-22	PAINT	BENJAMIN MOORE		GOLD MINE, #2155-20	EGGSHELL		PORTHOLES	CREATIVE CORNER	
099123	PT-23	PAINT	BENJAMIN MOORE		TANGY ORANGE, #2014-30	EGGSHELL		MATERIAL DISPLAYS	CREATIVE CORNER	
099123	PT-24	PAINT	BENJAMIN MOORE		SWEET PEA, #2031-30	EGGSHELL		PERF METAL ON GATES, MATERIAL DISPLAYS, STRUT CHANNEL GRID IN TODDLER EXPLORATION AREA, CORRUGATED METAL PANEL	CREATIVE CORNER	
099123	PT-25	PAINT	BENJAMIN MOORE		POOLSIDE BLUE, #1048-40	EGGSHELL		MATERIAL DISPLAYS, RE: BCM DRAWINGS	CREATIVE CORNER	
099123	PT-30	PAINT	BENJAMIN MOORE		STONE WHITE, 2120-70	EGGSHELL		THROUGHOUT EXHIBIT - BELOW 11'-2", RAMP AND STAIRS	ALL ABOARD	P1
099123	PT-31	PAINT	BENJAMIN MOORE		SMOKE GRAY, 2120-40	EGGSHELL		THROUGHOUT EXHIBIT - ABOVE 11'-2", POSTERS DISPLAYS ON RAMP AREA	ALL ABOARD	P2
099123	PT-32	PAINT	TBD		SILVER	FLAT		RAILINGS, HANDRAILS, HANDRAIL BRACKETS IN ALL ABOARD RAMP AND STAIRS	ALL ABOARD	
123661										
123661	HDPE-10	HDPE FOR PORTALS IN GATES	KING STARBOARD		SEAFOAM			PORTALS IN GATES, BEZEL	LET'S PLAY	
123661	HDPE-20	HDPE FOR PAINT HOLDERS	SEABOARD		MERCURY GREY		3/4"	PAINT HOLDERS	CREATIVE CORNER	
123661	SS-10	SOLID SURFACE COUNTERTOPS	AVONITE		COASTLINE 4310		3/4"		LET'S PLAY	
123661	SS-20	SOLID SURFACE	CORIAN		DEEP CLOUD		3/4"	PAINT TROUGH	CREATIVE CORNER	

C:\Users\chris.busch\Desktop\53494-00_USKC_Childrens-Exhibits_cbusch(Recovery).rvt

7/3/2019 2:33:00 PM

PGAV ARCHITECTS
PECKHAM GUYTON ALBERS & VIETS, INC.
1900 W.47th Place, #300, Westwood, KS 66205
(913) 362-6500 www.PGAV.COM

Copyright ©2019

STATE OF MISSOURI
MICHAEL ALAN SCHAADT
NUMBER A-6037
ARCHITECT
7-3-2019

THE SEAL AND SIGNATURE APPLY ONLY TO THE DOCUMENT TO WHICH THEY ARE AFFIXED, AND EXPRESSLY DISCLAIM ANY RESPONSIBILITY FOR ALL OTHER PLANS, SPECIFICATIONS, ESTIMATES, REPORTS, OR OTHER DOCUMENTS OR INSTRUMENTS RELATING TO OR INTENDED TO BE USED FOR ANY PART OR PARTS OF THE ARCHITECTURAL OR ENGINEERING PROJECT.

bgr CONSULTING ENGINEERS

#	DATE	DESCRIPTION

USKC EARLY CHILDHOOD EXHIBITS

SCIENCE CITY @ UNION STATION
30 W. PERSHING RD
KANSAS CITY, MO 64108

CONSTRUCTION DOCUMENTS

Original Size: 1 1/2" Drawing may have been reduced.
0" 1"

FINISH SCHEDULES - ALL EXHIBITS

DATE: 07/03/19
DRAWN: PGAV CHECKED: PGAV
PGAV #: 53494-00 CLIENT #:
SHEET #: A910

FLOOR FINISH LEGEND

- SC-20, POLISHED AND SEALED CONCRETE
- RS-20, ALTRO RESILIENT SHEET FLOORING
- RFT-20, MATS SAND TRAP (SAND STUDIO ENTRY)
- DEMO SLAB AREA FOR EXHAUST, RE: MEP

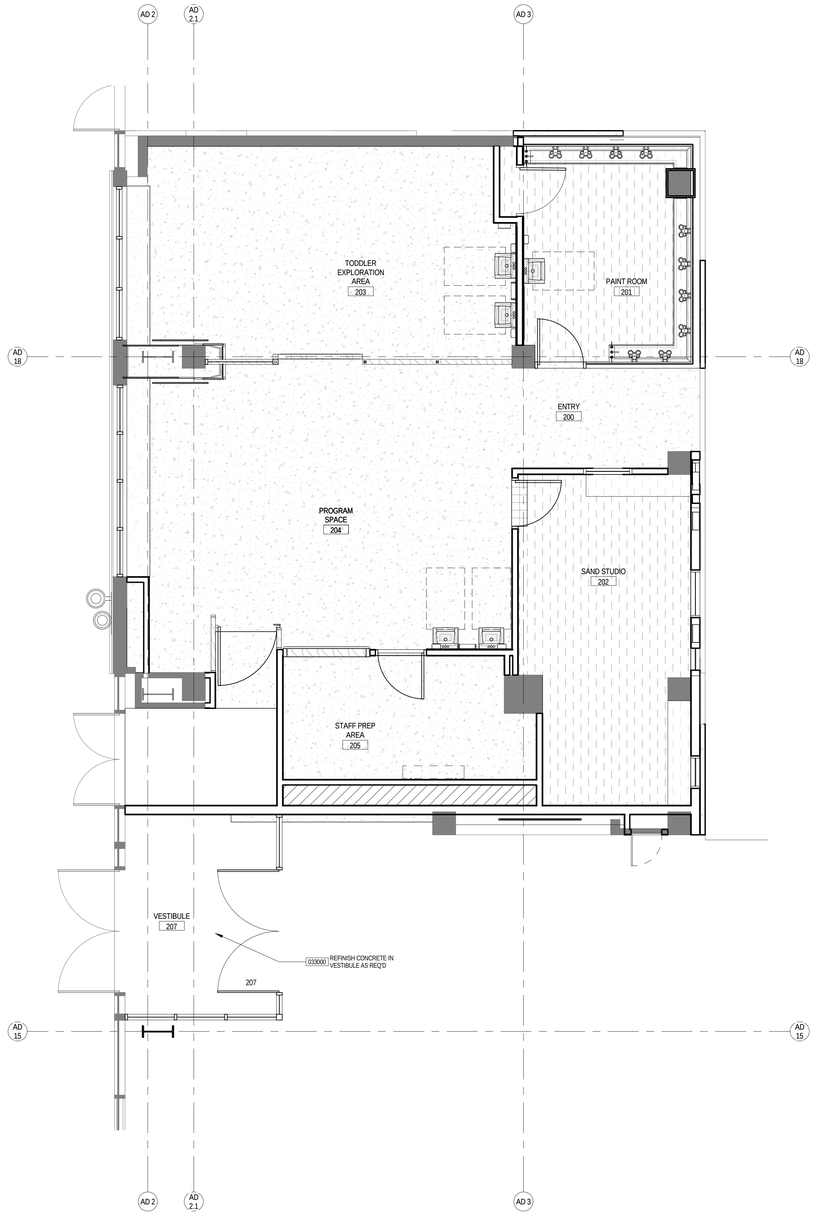

CREATIVE CORNER - FINISH PLAN
1/4" = 1'-0"
A1

PGAV ARCHITECTS
PECKHAM GUYTON ALBERS & VIETS, INC.
1900 W 47th Place, #300, Westwood, KS 66205
(913) 362-6500 www.PGAV.COM

Copyright ©2019

STATE OF MISSOURI
MICHAEL ALAN SCHAADT
NUMBER A-6037
ARCHITECT

THE SEAL AND SIGNATURE APPLY ONLY TO THE DOCUMENT TO WHICH THEY ARE ATTACHED AND DO NOT EXTEND THE RESPONSIBILITY FOR ALL OTHER PLANS, SPECIFICATIONS, ESTIMATES, REPORTS, OR OTHER DOCUMENTS OR INSTRUMENTS RELATING TO OR INTENDED TO BE USED FOR ANY PART OR PARTS OF THE ARCHITECTURAL OR ENGINEERING PROJECT.

bgr CONSULTING ENGINEERS

#	DATE	DESCRIPTION

USKC EARLY CHILDHOOD EXHIBITS

SCIENCE CITY @ UNION STATION
30 W. PERSHING RD
KANSAS CITY, MO 64108

CONSTRUCTION DOCUMENTS

Original Size: 1 1/2" Drawing may have been reduced.
0" 1"

FLOOR FINISH PLAN - CREATIVE CORNER

DATE: 07/03/19

DRAWN: PGAV	CHECKED: PGAV
PGAV # 53494-00	CLIENT #

SHEET #
A911

C:\Users\chris.busch\Desktop\53494-00_USKC_Childrens-Exhibits_cbusch(Recovery).rvt
7/3/2019 2:33:03 PM

FLOOR FINISH LEGEND

- CPT-10, CARPET COLOR 1, RENEWED BLUE
- CPT-11, CARPET COLOR 1 W/ PAD
- CPT-12, CARPET COLOR 2, REFRESHED GREEN
- RS-10, SHEET RUBBER, MANNINGTON
- LVT-10, VINYL TILE, MANNINGTON
- RFT-10, RUBBER FLOOR TILE, ROPPE
- L-10, WATERJET CUT LINOLEUM

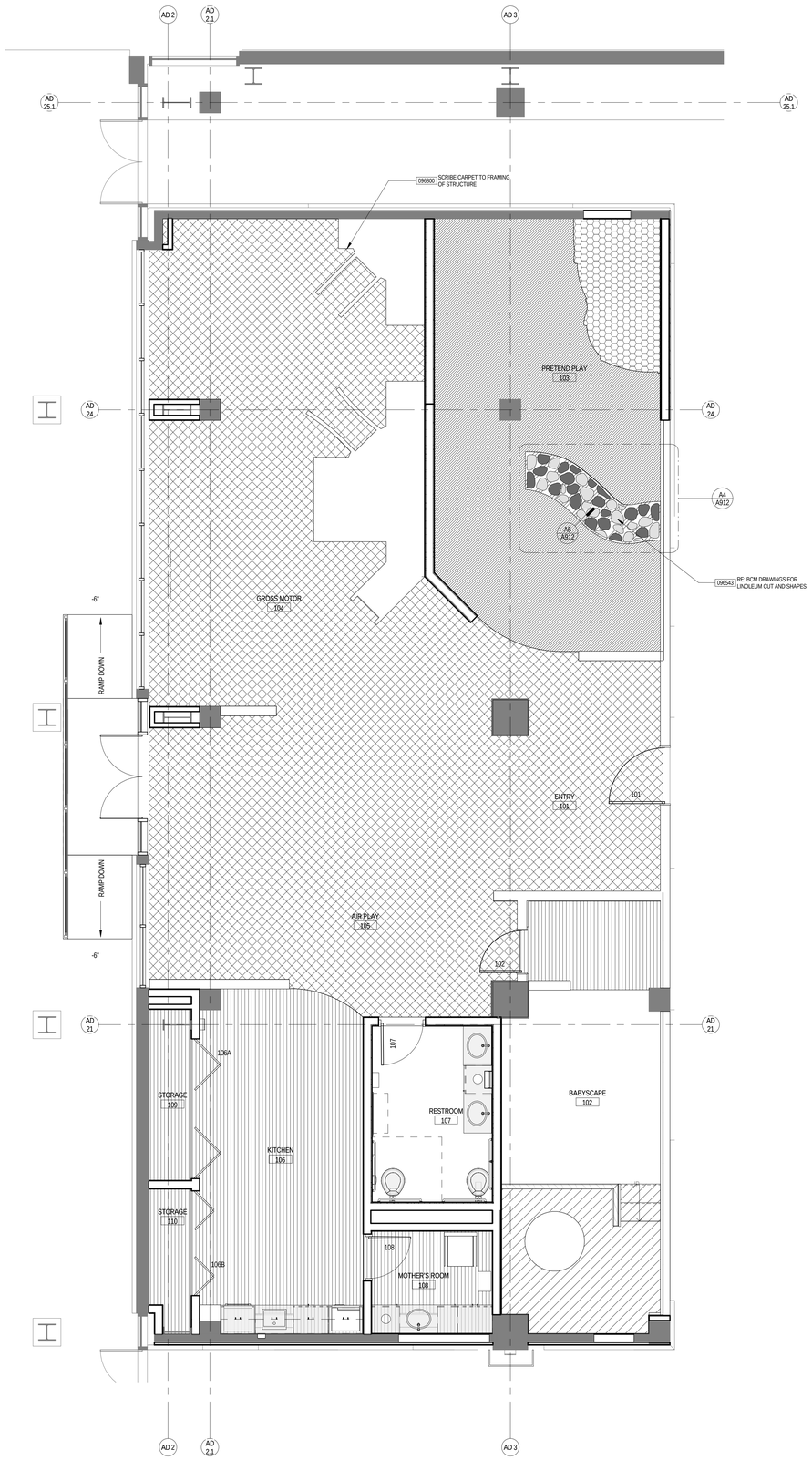

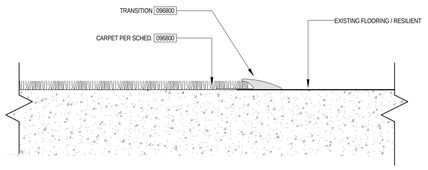

TRANSITION - CARPET TO RESILIENT/EXISTING **C5**
6" = 1'-0"

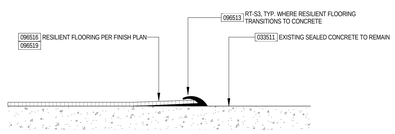

TRANSITION - RESILIENT TO CONCRETE **B5**
6" = 1'-0"

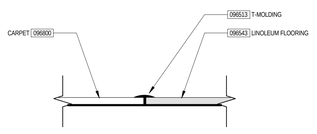

TRANSITION - LINOLEUM EDGE **A5**
6" = 1'-0"

- COLOR 1 - BACKGROUND - MCT-767 RUST
- COLOR 2 - MCT-795 BUTLER
- COLOR 3 - MCT-3050 WHITE BIRCH
- TRANSITION STRIP - TARKETT T-MOLDING CD-20-C 20 CHARCOAL

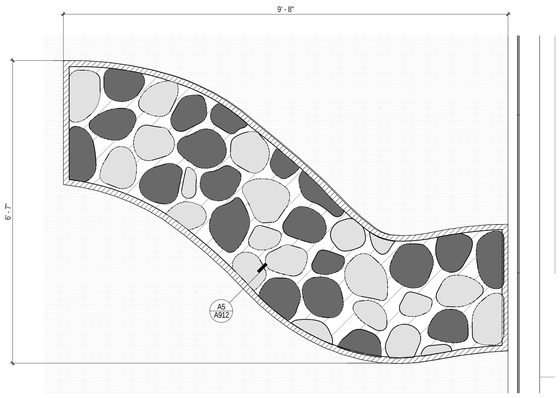

ENLARGED PLAN - LINOLEUM **A4**
3/4" = 1'-0"

LET'S PLAY - FINISH FLOOR PLAN **A1**
1/4" = 1'-0"

PGAV ARCHITECTS
PECKHAM GUYTON ALBERS & VIETS, INC.
1900 W 47th Place, #300, Westwood, KS 66205
(913) 362-6500 www.PGAV.COM
Copyright ©2019

STATE OF MISSOURI
MICHAEL ALAN SCHAADT
NUMBER A-6073
ARCHITECT

THE SEAL AND SIGNATURE APPLY ONLY TO THE DOCUMENT TO WHICH IT IS AFFIXED. THE ARCHITECT DISCLAIMS ANY RESPONSIBILITY FOR ALL OTHER PLANS, SPECIFICATIONS, ESTIMATES, REPORTS, OR OTHER DOCUMENTS OR INSTRUMENTS RELATING TO OR PURPORTING TO RELATE TO ANY OR ALL PARTS OF THE ARCHITECTURAL OR ENGINEERING PROJECT.

bgr CONSULTING ENGINEERS

#	DATE	DESCRIPTION

USKC EARLY CHILDHOOD EXHIBITS

SCIENCE CITY @ UNION STATION
30 W. PERSHING RD
KANSAS CITY, MO 64108

CONSTRUCTION DOCUMENTS

Original Size: 1 1/2" Drawing may have been reduced.

FLOOR FINISH PLAN - LET'S PLAY

DATE:	
07/03/19	
DRAWN: PGAV	CHECKED: PGAV
PGAV # 53494-00	CLIENT #

SHEET #
A912

7/2/2019 2:33:11 PM C:\Users\chris.bausch\Desktop\53494-00_USKC_Childrens Exhibits_cbausch(Recovery).rvt

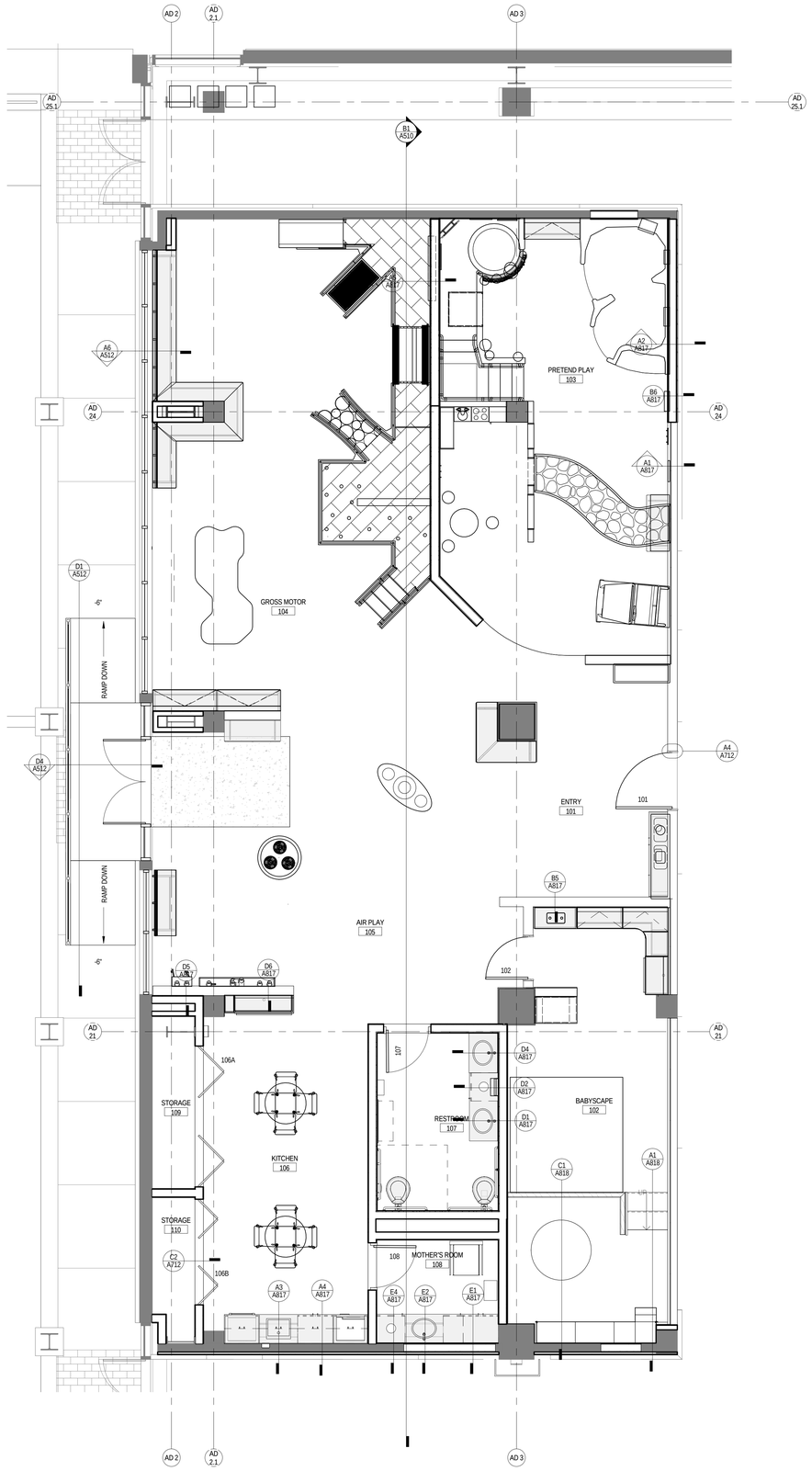

LET'S PLAY - EXHIBIT PLAN **D1**
1/4" = 1'-0"

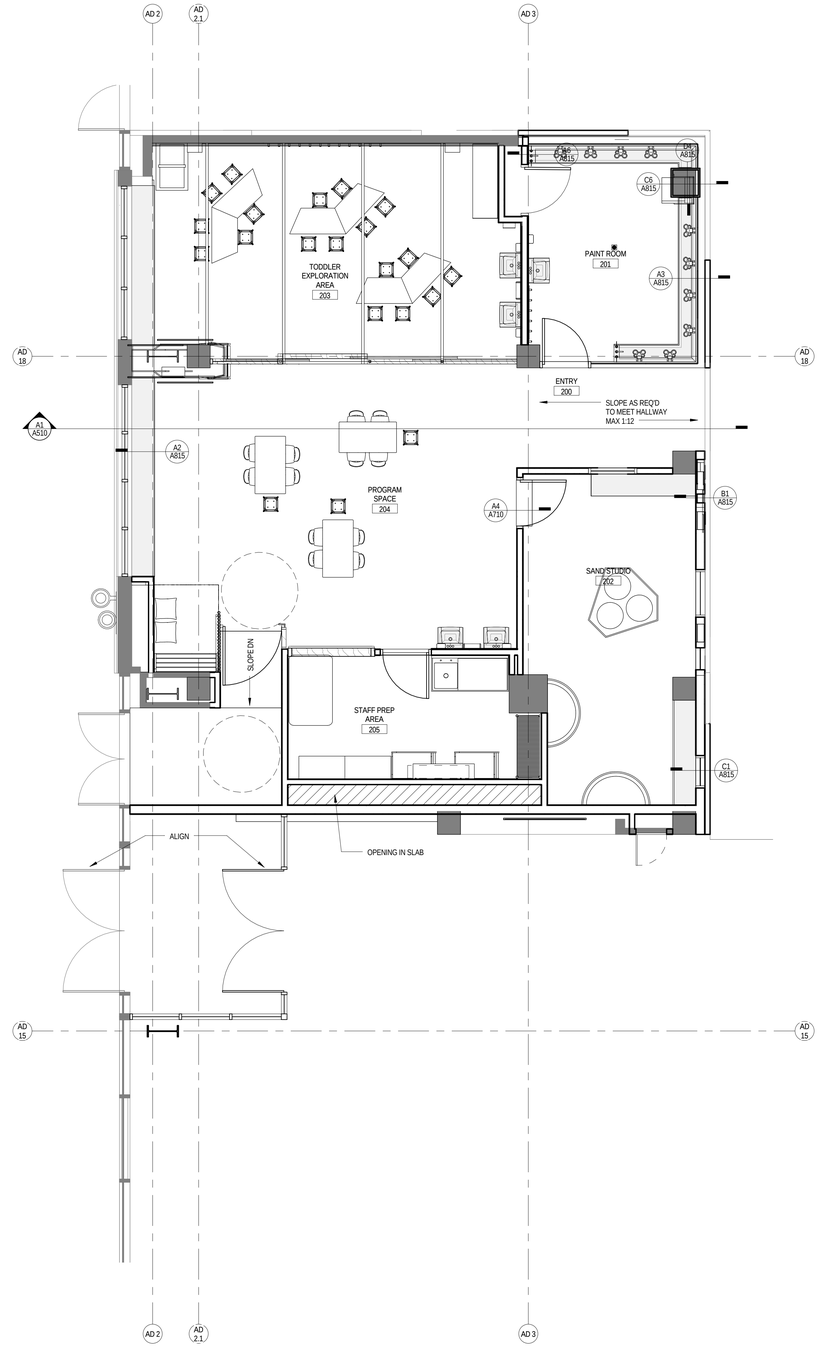

CREATIVE CORNER - EXHIBIT PLAN **A1**
1/4" = 1'-0"

PGAV ARCHITECTS
PECKHAM GUYTON ALBERS & VIETS, INC.
1900 W 47th Place, #300, Westwood, KS 66205
(913) 362-6500
www.PGAV.COM
Copyright ©2019

STATE OF MISSOURI
MICHAEL ALAN SCHAADT
NUMBER A-6677
REGISTERED ARCHITECT

THE SEAL AND SIGNATURE APPLY ONLY TO THE DOCUMENT TO WHICH IT IS AFFIXED. THE ARCHITECT DOES NOT ACCEPT RESPONSIBILITY FOR ALL OTHER PLANS, SPECIFICATIONS, ESTIMATES, REPORTS, OR OTHER DOCUMENTS OR INSTRUMENTS RELATED TO THE ARCHITECTURAL OR ENGINEERING PRACTICE OF THE ARCHITECTURAL OR ENGINEERING PROJECT.

bgr CONSULTING ENGINEERS

#	DATE	DESCRIPTION

USKC EARLY CHILDHOOD EXHIBITS

SCIENCE CITY @ UNION STATION
30 W. PERSHING RD
KANSAS CITY, MO 64108

CONSTRUCTION DOCUMENTS

Original Size: 1 1/2" Drawing may have been reduced.

EXHIBIT PLANS - CHILDREN'S EXHIBITS

DATE: 07/03/19
DRAWN: PGAV
CHECKED: PGAV
PGAV #: 53494-00
CLIENT #:
SHEET #: A915

C:\Users\chris.busch\Desktop\53494-00_USKC_Children Exhibits_cbusch\Revit\wrvy3.rvt
7/2/2019 2:33:17 PM

FLOOR FINISH LEGEND

- CPT-30, CARPET
- CPT-31, CARPET
- RS-30, RUBBER FALL SURFACE
- RS-31, RESILIENT SHEET FLOORING
- V-30, VINYL FLOOR RAIL GRAPHIC
- V-31, VINYL FLOOR CHECKBOARD GRAPHIC
- V-32, VINYL FLOOR DIAMOND PLATE GRAPHIC

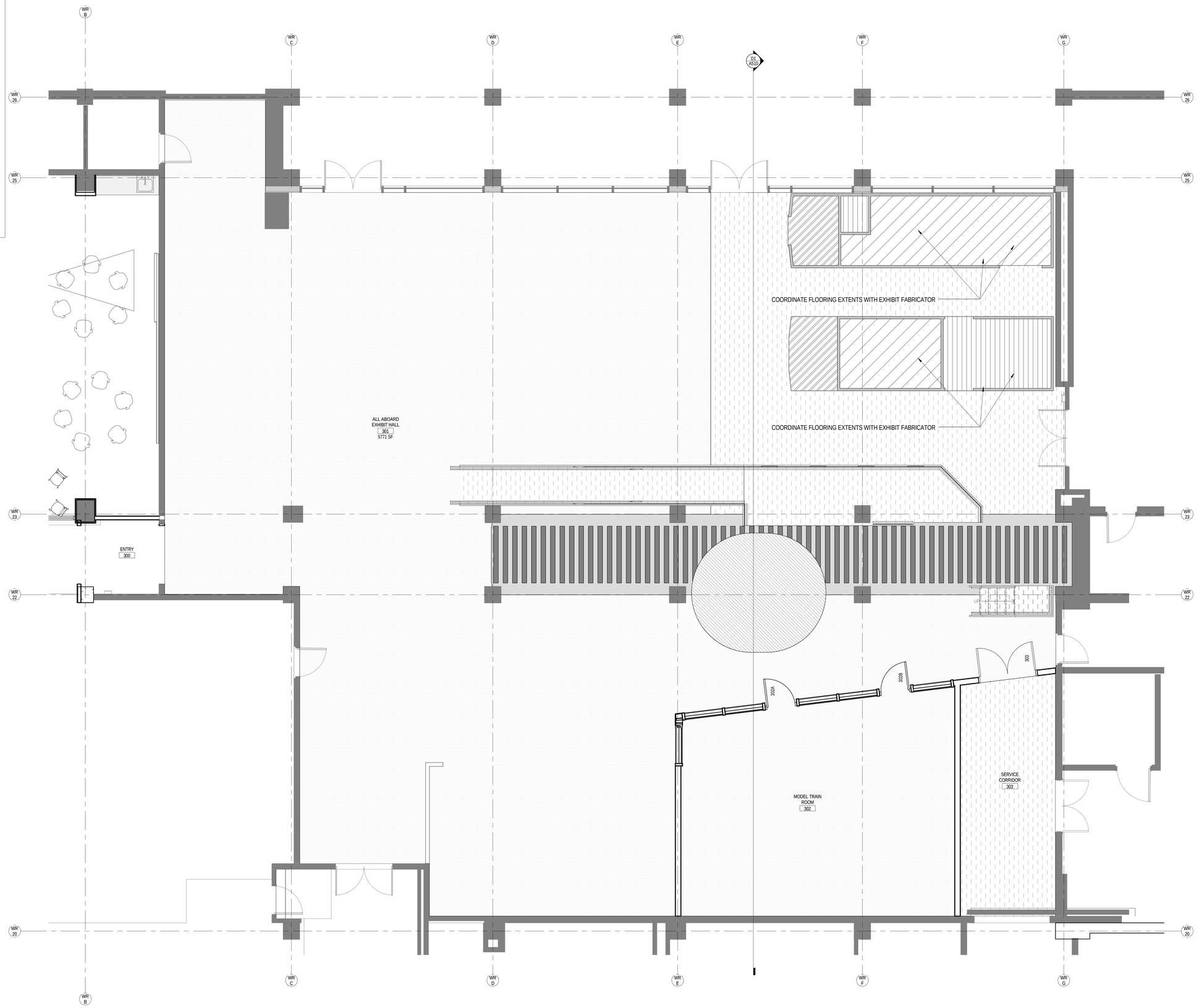

FLOOR PLAN - ALL ABOARD
1/4" = 1'-0"
A1

PGAV ARCHITECTS
PECKHAM GUYTON ALBERS & VIETS, INC.
1900 W 47th Place, #300, Westwood, KS 66205
(913) 362-6500 www.PGAV.COM

Copyright ©2019

STATE OF MISSOURI
MICHAEL ALAN SCHAADT
NUMBER A-4037
ARCHITECT

THE SEAL AND SIGNATURE APPLY ONLY TO THE DOCUMENT TO WHICH THEY ARE AFFIXED AND DO NOT EXTEND THE DOCUMENT RESPONSIBILITY FOR ALL OTHER PLANS, SPECIFICATIONS, ESTIMATES, REPORTS, OR OTHER DOCUMENTS OR INSTRUMENTS RELATING TO OR INTENDED TO BE USED FOR ANY PART OR PARTS OF THE ARCHITECTURAL OR ENGINEERING PROJECT.

bgr CONSULTING ENGINEERS

#	DATE	DESCRIPTION

USKC EARLY CHILDHOOD EXHIBITS

SCIENCE CITY @ UNION STATION
30 W. PERSHING RD
KANSAS CITY, MO 64108

CONSTRUCTION DOCUMENTS

Original Size: 1 1/2" Drawing may have been reduced.
0" 1"

FLOOR FINISH PLAN - ALL ABOARD

DATE: 07/03/19
DRAWN: PGAV
CHECKED: PGAV
PGAV # 53494-00
CLIENT #
SHEET #
A921

C:\Users\chris.busch\Desktop\53494-00_USKC_Childrens-Exhibits_cbusch(Recovery).rvt
7/3/2019 2:33:40 PM

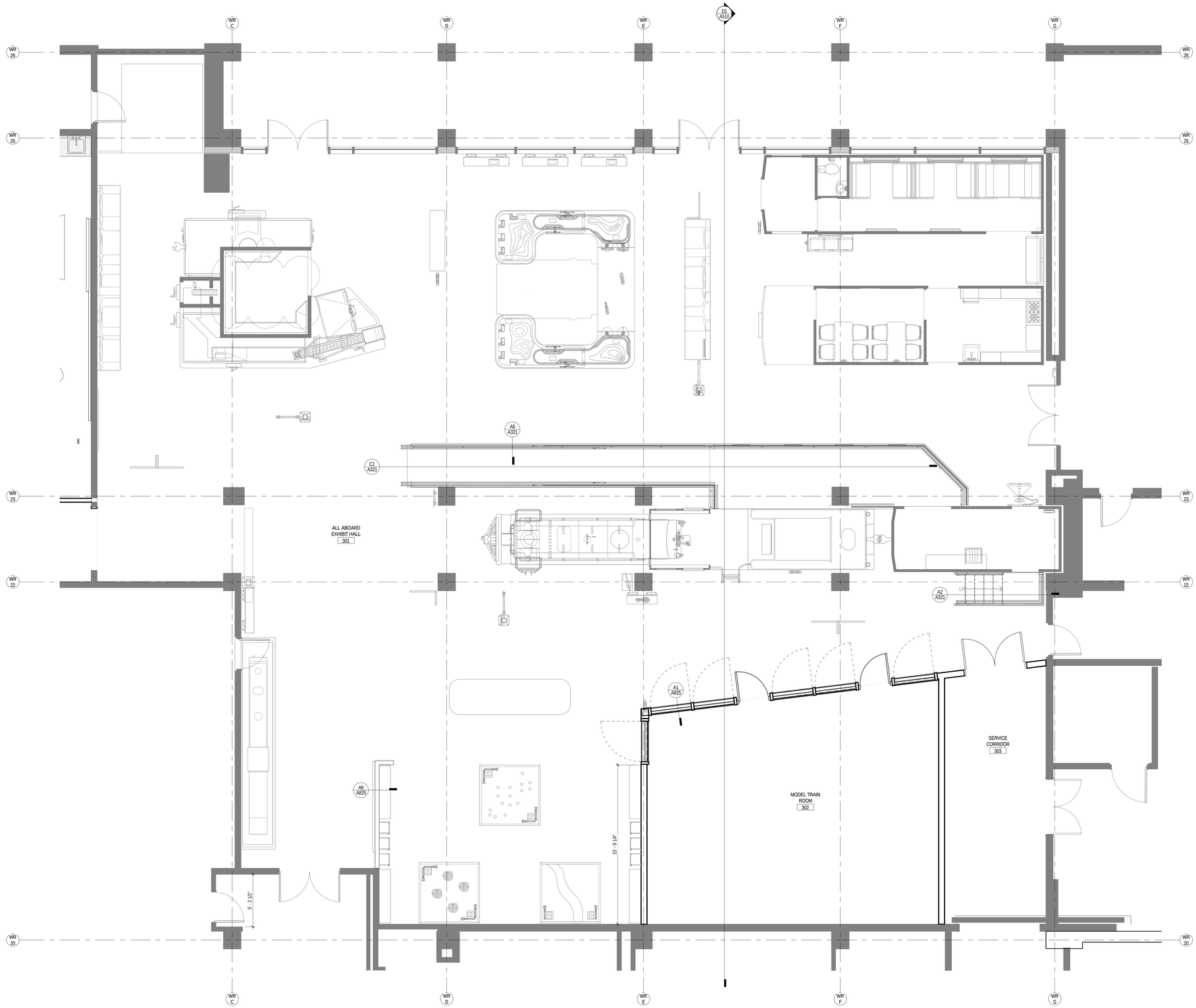

ALL ABOARD TRAIN EXHIBIT - FLOOR PLAN
1/4" = 1'-0"
A1

PGAV ARCHITECTS
PECKHAM GUYTON ALBERS & VIETS, INC.
1900 W 47th Place, #300, Westwood, KS 66205
(913) 362-6500 www.PGAV.COM

Copyright ©2019

STATE OF MISSOURI
MICHAEL ALAN SCHAADT
NUMBER A-6037
ARCHITECT

THE SEAL AND SIGNATURE APPLY ONLY TO THE DOCUMENT TO WHICH THEY ARE ATTACHED AND DENOTED IN SCHEDULE. NO RESPONSIBILITY FOR ALL OTHER PLANS, SPECIFICATIONS, ESTIMATES, REPORTS, OR OTHER DOCUMENTS OR INSTRUMENTS RELATING TO OR INTENDED TO BE USED FOR ANY PART OR PARTS OF THE ARCHITECTURAL OR ENGINEERING PROJECT.

bgr CONSULTING ENGINEERS

#	DATE	DESCRIPTION

USKC EARLY CHILDHOOD EXHIBITS

SCIENCE CITY @ UNION STATION
30 W. PERSHING RD
KANSAS CITY, MO 64108

CONSTRUCTION DOCUMENTS

Original Size: 1 1/2" Drawing may have been reduced.
0" 1"

EXHIBIT PLAN - ALL ABOARD

DATE: 07/03/19
DRAWN: PGAV
CHECKED: PGAV
PGAV #: 53494-00
CLIENT #:
SHEET #: A925

C:\Users\chris.busch\Desktop\53494-00_USKC_Childrens-Exhibits_cbusch(Recovery).rvt
7/2/2019 2:33:54 PM

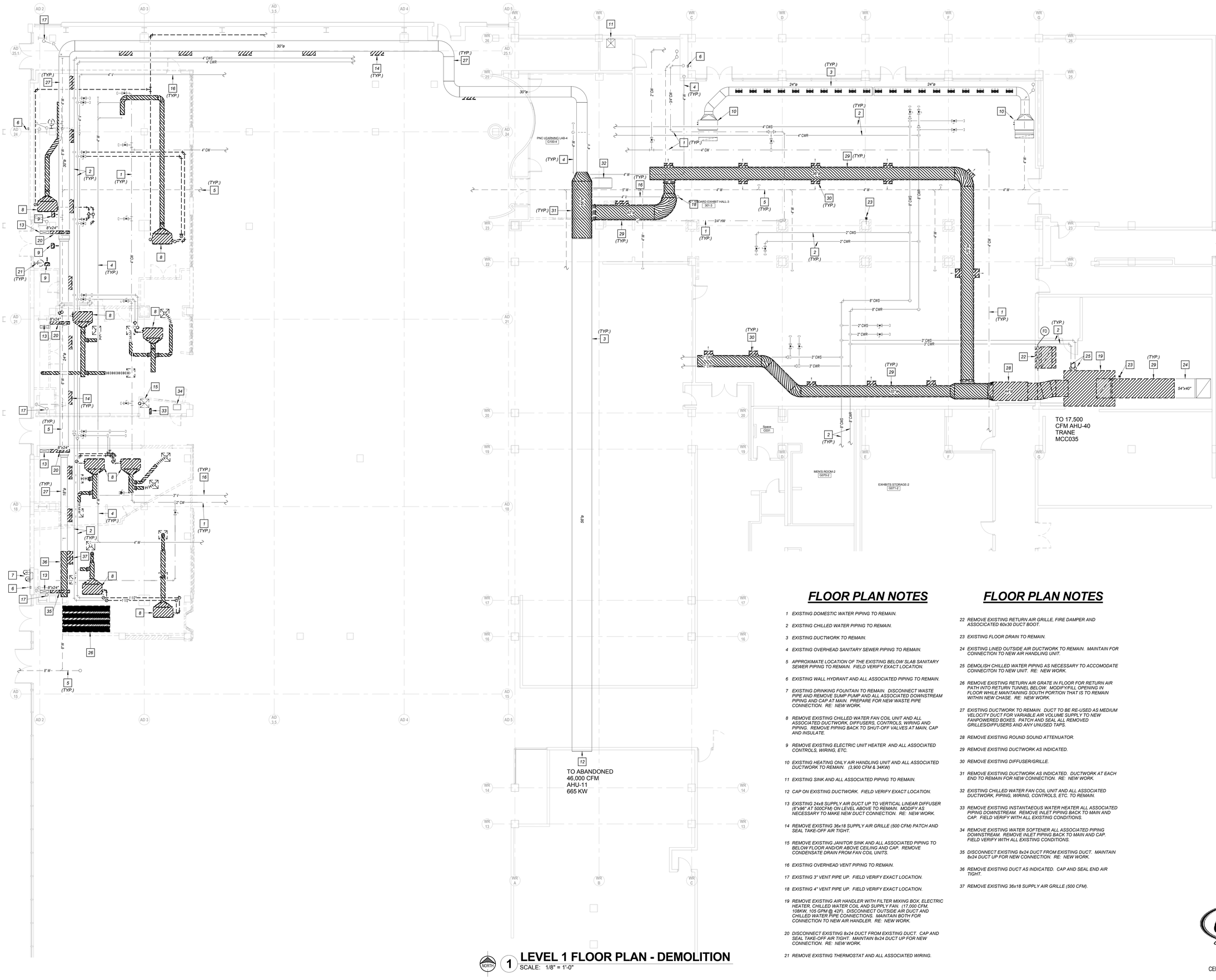

FLOOR PLAN NOTES

1 *EXISTING DOMESTIC WATER PIPING TO REMAIN.*

2 *EXISTING CHILLED WATER PIPING TO REMAIN.*

3 *EXISTING DUCTWORK TO REMAIN.*

4 *EXISTING OVERHEAD SANITARY SEWER PIPING TO REMAIN.*

5 *APPROXIMATE LOCATION OF THE EXISTING BELOW SLAB SANITARY SEWER PIPING TO REMAIN. FIELD VERIFY EXACT LOCATION.*

6 *EXISTING WALL HYDRANT AND ALL ASSOCIATED PIPING TO REMAIN.*

7 *EXISTING DRINKING FOUNTAIN TO REMAIN. DISCONNECT WASTE PIPE AND REMOVE SUMP PUMP AND ALL ASSOCIATED DOWNSTREAM PIPING AND CAP AT MAIN. PREPARE FOR NEW WASTE PIPE CONNECTION. RE: NEW WORK.*

8 *REMOVE EXISTING CHILLED WATER FAN COIL UNIT AND ALL ASSOCIATED DUCTWORK, DIFFUSERS, CONTROLS, WIRING AND PIPING. REMOVE PIPING BACK TO SHUT-OFF VALVES AT MAIN, CAP AND INSULATE.*

9 *REMOVE EXISTING ELECTRIC UNIT HEATER AND ALL ASSOCIATED CONTROLS, WIRING, ETC.*

10 *EXISTING HEATING ONLY AIR HANDLING UNIT AND ALL ASSOCIATED DUCTWORK TO REMAIN. (3,900 CFM & 34KW)*

11 *EXISTING SINK AND ALL ASSOCIATED PIPING TO REMAIN.*

12 *CAP ON EXISTING DUCTWORK. FIELD VERIFY EXACT LOCATION.*

13 *EXISTING 24x8 SUPPLY AIR DUCT UP TO VERTICAL LINEAR DIFFUSER (6"x96" AT 500CFM) ON LEVEL ABOVE TO REMAIN. MODIFY AS NECESSARY TO MAKE NEW DUCT CONNECTION. RE: NEW WORK.*

14 *REMOVE EXISTING 36x18 SUPPLY AIR GRILLE (500 CFM) PATCH AND SEAL TAKE-OFF AIR TIGHT.*

15 *REMOVE EXISTING JANITOR SINK AND ALL ASSOCIATED PIPING TO BELOW FLOOR AND/OR ABOVE CEILING AND CAP. REMOVE CONDENSATE DRAIN FROM FAN COIL UNITS.*

16 *EXISTING OVERHEAD VENT PIPING TO REMAIN.*

17 *EXISTING 3" VENT PIPE UP. FIELD VERIFY EXACT LOCATION.*

18 *EXISTING 4" VENT PIPE UP. FIELD VERIFY EXACT LOCATION.*

19 *REMOVE EXISTING AIR HANDLER WITH FILTER MIXING BOX, ELECTRIC HEATER, CHILLED WATER COIL AND SUPPLY FAN. (17,000 CFM, 108KW, 105 GPM @ 42F). DISCONNECT OUTSIDE AIR DUCT AND CHILLED WATER PIPE CONNECTIONS. MAINTAIN BOTH FOR CONNECTION TO NEW AIR HANDLER. RE: NEW WORK.*

20 *DISCONNECT EXISTING 8x24 DUCT FROM EXISTING DUCT. CAP AND SEAL TAKE-OFF AIR TIGHT. MAINTAIN 8x24 DUCT UP FOR NEW CONNECTION. RE: NEW WORK.*

21 *REMOVE EXISTING THERMOSTAT AND ALL ASSOCIATED WIRING.*

FLOOR PLAN NOTES

22 *REMOVE EXISTING RETURN AIR GRILLE, FIRE DAMPER AND ASSOCICATED 60x30 DUCT BOOT.*

23 *EXISTING FLOOR DRAIN TO REMAIN.*

24 *EXISTING LINED OUTSIDE AIR DUCTWORK TO REMAIN. MAINTAIN FOR CONNECTION TO NEW AIR HANDLING UNIT.*

25 *DEMOLISH CHILLED WATER PIPING AS NECESSARY TO ACCOMODATE CONNECITON TO NEW UNIT. RE: NEW WORK.*

26 *REMOVE EXISTING RETURN AIR GRATE IN FLOOR FOR RETURN AIR PATH INTO RETURN TUNNEL BELOW. MODIFY/FILL OPENING IN FLOOR WHILE MAINTAINING SOUTH PORTION THAT IS TO REMAIN WITHIN NEW CHASE. RE: NEW WORK.*

27 *EXISTING DUCTWORK TO REMAIN. DUCT TO BE RE-USED AS MEDIUM VELOCITY DUCT FOR VARIABLE AIR VOLUME SUPPLY TO NEW FANPOWERED BOXES. PATCH AND SEAL ALL REMOVED GRILLES/DIFFUSERS AND ANY UNUSED TAPS.*

28 *REMOVE EXISTING ROUND SOUND ATTENUATOR.*

29 *REMOVE EXISTING DUCTWORK AS INDICATED.*

30 *REMOVE EXISTING DIFFUSER/GRILLE.*

31 *REMOVE EXISTING DUCTWORK AS INDICATED. DUCTWORK AT EACH END TO REMAIN FOR NEW CONNECTION. RE: NEW WORK.*

32 *EXISTING CHILLED WATER FAN COIL UNIT AND ALL ASSOCIATED DUCTWORK, PIPING, WIRING, CONTROLS, ETC. TO REMAIN.*

33 *REMOVE EXISTING INSTANTAEOUS WATER HEATER ALL ASSOCIATED PIPING DOWNSTREAM. REMOVE INLET PIPING BACK TO MAIN AND CAP. FIELD VERIFY WITH ALL EXISTING CONDITIONS.*

34 *REMOVE EXISTING WATER SOFTENER ALL ASSOCIATED PIPING DOWNSTREAM. REMOVE INLET PIPING BACK TO MAIN AND CAP. FIELD VERIFY WITH ALL EXISTING CONDITIONS.*

35 *DISCONNECT EXISTING 8x24 DUCT FROM EXISTING DUCT. MAINTAIN 8x24 DUCT UP FOR NEW CONNECTION. RE: NEW WORK.*

36 *REMOVE EXISTING DUCT AS INDICATED. CAP AND SEAL END AIR TIGHT.*

37 *REMOVE EXISTING 36x18 SUPPLY AIR GRILLE (500 CFM).*

1 LEVEL 1 FLOOR PLAN - DEMOLITION

SCALE: 1/8" = 1'-0"

PGAV ARCHITECTS
PECKHAM GUYTON ALBERS & VIETS, INC.
1900 W.47th Place, #200, Westwood, KS 66205
(913) 362-4500 www.PGAV.COM

Copyright ©2015

STATE OF MISSOURI
DOMINICK J. VIVIANO
NUMBER E-2001004656
7/31/19
REGISTERED PROFESSIONAL ENGINEER

THE SEAL AND SIGNATURE APPLY ONLY TO THE DOCUMENT TO WHICH THEY ARE AFFIXED. THE ENGINEER ASSUMES NO RESPONSIBILITY FOR ALL OTHER PLANS, SPECIFICATIONS, ESTIMATES, REPORTS, OR OTHER DOCUMENTS OR INSTRUMENTS RELATING TO OR INTENDED TO BE A PART OF THE PROJECT OR PARTS OF THE ARCHITECTURAL OR ENGINEERING PROJECT.

#	DATE	DESCRIPTION

USKC EARLY CHILDHOOD EXHIBITS

SCIENCE CITY @ UNION STATION
30 W. PERSHING RD
KANSAS CITY, MO 64108

CONSTRUCTION DOCUMENTS

Original Size: 1 1/2" Drawing may have been reduced.
0" 1"

MECHANICAL DEMOLITION PLAN

DATE:	07/03/2019
DRAWN: DVR	CHECKED: DVR
PGAV #: 53494-00	CLIENT #
SHEET #: M210	

bgr Consulting Engineers
Ph: 816.842.2800
Fx: 816.842.4884
CERTIFICATE OF AUTHORITY # 2006007202

6/28/2019 10:33:01 AM C:\Users\Dominick\Documents\Vault\Vault_Union Station-Mech_dvivian.rvt

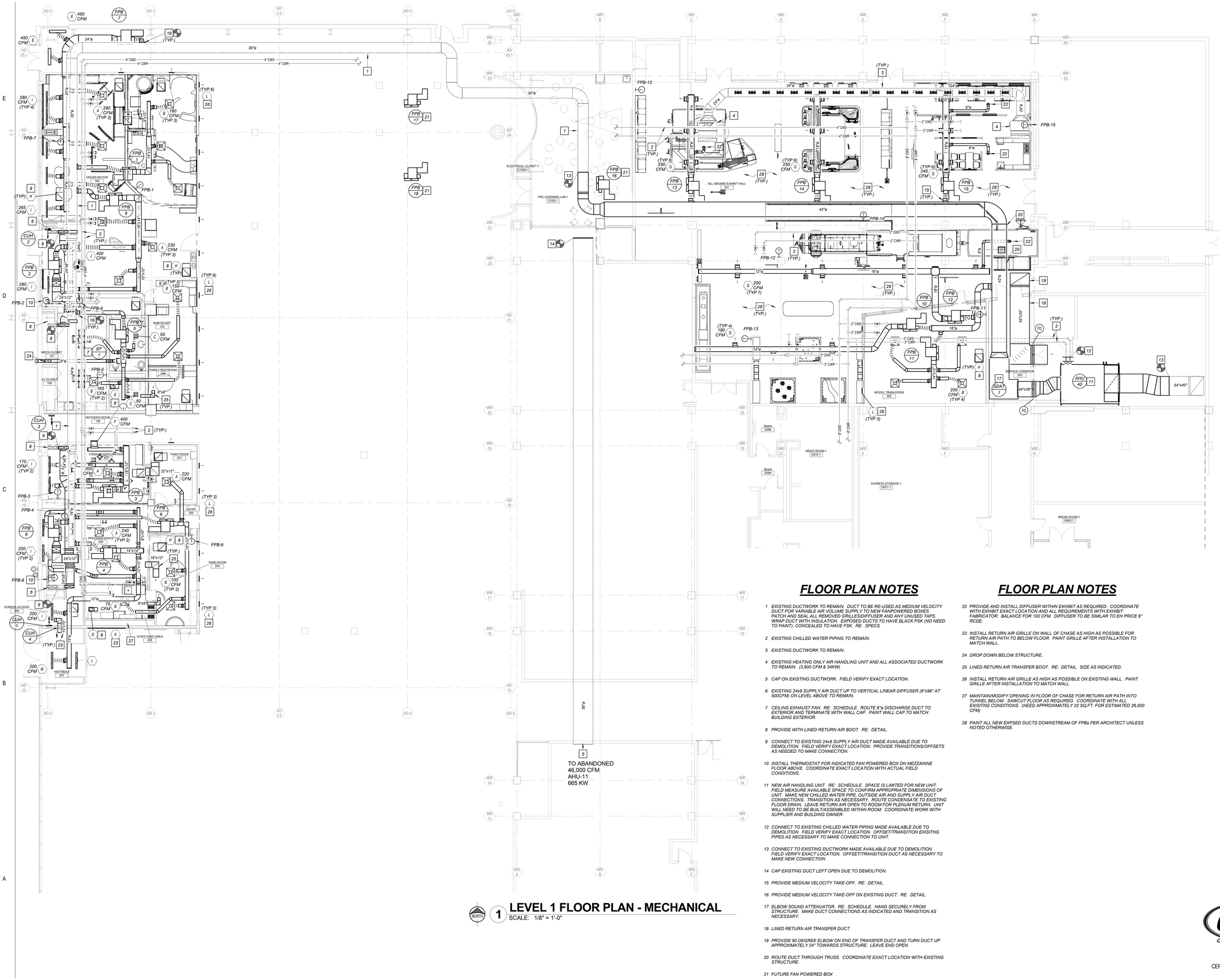

1 LEVEL 1 FLOOR PLAN - MECHANICAL

SCALE: 1/8" = 1'-0"

FLOOR PLAN NOTES

1 *EXISTING DUCTWORK TO REMAIN. DUCT TO BE RE-USED AS MEDIUM VELOCITY DUCT FOR VARIABLE AIR VOLUME SUPPLY TO NEW FANPOWERED BOXES. PATCH AND SEAL ALL REMOVED GRILLES/DIFFUSER AND ANY UNUSED TAPS. WRAP DUCT WITH INSULATION. EXPOSED DUCTS TO HAVE BLACK PSK (NO NEED TO PAINT), CONCEALED TO HAVE FSK. RE: SPECS.*

2 *EXISTING CHILLED WATER PIPING TO REMAIN.*

3 *EXISTING DUCTWORK TO REMAIN.*

4 *EXISTING HEATING ONLY AIR HANDLING UNIT AND ALL ASSOCIATED DUCTWORK TO REMAIN. (3,900 CFM & 34KW)*

5 *CAP ON EXISTING DUCTWORK. FIELD VERIFY EXACT LOCATION.*

6 *EXISTING 24x8 SUPPLY AIR DUCT UP TO VERTICAL LINEAR DIFFUSER (6"x96" AT 500CFM) ON LEVEL ABOVE TO REMAIN.*

7 *CEILING EXHAUST FAN. RE: SCHEDULE. ROUTE 8"ø DISCHARGE DUCT TO EXTERIOR AND TERMINATE WITH WALL CAP. PAINT WALL CAP TO MATCH BUILDING EXTERIOR.*

8 *PROVIDE WITH LINED RETURN AIR BOOT. RE: DETAIL.*

9 *CONNECT TO EXISTING 24x8 SUPPLY AIR DUCT MADE AVAILABLE DUE TO DEMOLITION. FIELD VERIFY EXACT LOCATION. PROVIDE TRANSITIONS/OFFSETS AS NEEDED TO MAKE CONNECTION.*

10 *INSTALL THERMOSTAT FOR INDICATED FAN POWERED BOX ON MEZZANINE FLOOR ABOVE. COORDINATE EXACT LOCATION WITH ACTUAL FIELD CONDITIONS.*

11 *NEW AIR HANDLING UNIT. RE: SCHEDULE. SPACE IS LIMITED FOR NEW UNIT. FIELD MEASURE AVAILABLE SPACE TO CONFIRM APPROPRIATE DIMENSIONS OF UNIT. MAKE NEW CHILLED WATER PIPE, OUTSIDE AIR AND SUPPLY AIR DUCT CONNECTIONS. TRANSITION AS NECESSARY. ROUTE CONDENSATE TO EXISTING FLOOR DRAIN. LEAVE RETURN AIR OPEN TO ROOM FOR PLENUM RETURN. UNIT WILL NEED TO BE BUILT/ASSEMBLED WITHIN ROOM. COORDINATE WORK WITH SUPPLIER AND BUILDING OWNER.*

12 *CONNECT TO EXISTING CHILLED WATER PIPING MADE AVAILABLE DUE TO DEMOLITION. FIELD VERIFY EXACT LOCATION. OFFSET/TRANSITION EXISITNG PIPES AS NECESSARY TO MAKE CONNECTION TO UNIT.*

13 *CONNECT TO EXISTING DUCTWORK MADE AVAILABLE DUE TO DEMOLITION. FIELD VERIFY EXACT LOCATION. OFFSET/TRANSITION DUCT AS NECESSARY TO MAKE NEW CONNECTION.*

14 *CAP EXISTING DUCT LEFT OPEN DUE TO DEMOLITION.*

15 *PROVIDE MEDIUM VELOCITY TAKE-OFF. RE: DETAIL.*

16 *PROVIDE MEDIUM VELOCITY TAKE-OFF ON EXISTING DUCT. RE: DETAIL.*

17 *ELBOW SOUND ATTENUATOR. RE: SCHEDULE. HANG SECURELY FROM STRUCTURE. MAKE DUCT CONNECTIONS AS INDICATED AND TRANSITION AS NECESSARY.*

18 *LINED RETURN AIR TRANSFER DUCT.*

19 *PROVIDE 90 DEGREE ELBOW ON END OF TRANSFER DUCT AND TURN DUCT UP APPROXIMATELY 24" TOWARDS STRUCTURE. LEAVE END OPEN.*

20 *ROUTE DUCT THROUGH TRUSS. COORDINATE EXACT LOCATION WITH EXISTING STRUCTURE.*

21 *FUTURE FAN POWERED BOX*

FLOOR PLAN NOTES

22 *PROVIDE AND INSTALL DIFFUSER WITHIN EXHIBIT AS REQUIRED. COORDINATE WITH EXHIBIT EXACT LOCATION AND ALL REQUIREMENTS WITH EXHIBIT FABRICATOR. BALANCE FOR 100 CFM. DIFFUSER TO BE SIMILAR TO EH PRICE 6" RCDE.*

23 *INSTALL RETURN AIR GRILLE ON WALL OF CHASE AS HIGH AS POSSIBLE FOR RETURN AIR PATH TO BELOW FLOOR. PAINT GRILLE AFTER INSTALLATION TO MATCH WALL.*

24 *DROP DOWN BELOW STRUCTURE.*

25 *LINED RETURN AIR TRANSFER BOOT. RE: DETAIL. SIZE AS INDICATED.*

26 *INSTALL RETURN AIR GRILLE AS HIGH AS POSSIBLE ON EXISTING WALL. PAINT GRILLE AFTER INSTALLATION TO MATCH WALL.*

27 *MAINTAIN/MODIFY OPENING IN FLOOR OF CHASE FOR RETURN AIR PATH INTO TUNNEL BELOW. SAWCUT FLOOR AS REQUIRED. COORDINATE WITH ALL EXISITNG CONDITIONS. (NEED APPROXIMATELY 22 SQ.FT. FOR ESTIMATED 26,000 CFM)*

28 *PAINT ALL NEW EXPSED DUCTS DOWNSTREAM OF FPBs PER ARCHITECT UNLESS NOTED OTHERWISE.*

PGAV ARCHITECTS
PECKHAM GUYTON ALBERS & VIETS, INC.
1900 W.47th Place, #200, Westwood, KS 66205
(913) 362-6500 www.PGAV.COM

Copyright ©2015

STATE OF MISSOURI
DOMINICK R. VAN DER
PROCESSED
NUMBER
E-2001004656
REGISTERED PROFESSIONAL ENGINEER
7/3/19

THE SEAL AND SIGNATURE APPLY ONLY TO THE DOCUMENT TO WHICH THEY ARE AFFIXED. THE ENGINEER ASSUMES NO RESPONSIBILITY FOR ALL OTHER PLANS, SPECIFICATIONS, ESTIMATES, REPORTS, OR OTHER DOCUMENTS OR INSTRUMENTS RELATING TO OR INTENDED FOR USE ON ANY PART OR PARTS OF THE ARCHITECTURAL OR ENGINEERING PROJECT.

#	DATE	DESCRIPTION

USKC EARLY CHILDHOOD EXHIBITS

SCIENCE CITY @ UNION STATION
30 W. PERSHING RD
KANSAS CITY, MO 64108

CONSTRUCTION DOCUMENTS

Original Size: 1 1/2" Drawing may have been reduced.
0" 1"

MECHANICAL PLAN

DATE: 07/03/2019
DRAWN: DVR | CHECKED: DVR
PGAV # 53494-00 | CLIENT #
SHEET # **M310**

bgr Consulting Engineers
Ph: 816.842.2800
Fx: 816.842.4884
CERTIFICATE OF AUTHORITY # 2006007202

6/28/2019 10:33:28 AM C:\Users\Dominick\Documents\cy-r16 17-4\Union Station-Mech_drivanette.rvt

(MS-18) CHILLED WATER / ELECTRIC HEATING AIR HANDLING UNIT SCHEDULE

MARK	#	MANUFACTURER	MODEL NO.	PRODUCT DESCRIPTION	AIRFLOW – FAN DATA FLOW (cfm)	AIRFLOW – FAN DATA HP	AIRFLOW – O.A. FLOW (cfm)	AIRFLOW – E.S.P. (in-wg)	AIRFLOW – T.S.P. (in-wg)	COOLING COIL DATA – AMB. (°F)	COOLING COIL DATA – TOTAL (mBtu/h)	COOLING COIL DATA – SENSIBLE (mBtu/h)	ENTERING AIR D.B. (°F)	ENTERING AIR W.B. (°F)	LEAVING AIR D.B. (°F)	LEAVING AIR W.B. (°F)	CHILLED WATER COIL – GPM	CHILLED WATER COIL – PRESS DROP (FT)	CHILLED WATER COIL – CW EWT (°F)	CHILLED WATER COIL – CW LWT (°F)	HEATING COIL DATA – FLOW (cfm)	HEATING COIL DATA – kW	HEATING COIL DATA – TOTAL (mBtu/h)	HEATING COIL DATA – E.A.T. (°F)	HEATING COIL DATA – ΔT (°F)	HEATING COIL DATA – L.A.T. (°F)	ELECTRICAL – VOLTS	ELECTRICAL – ø	ELECTRICAL – HZ	ELECTRICAL – FAN MCA	ELECTRICAL – FAN MOCP	ELECTRICAL – HEAT MCA	ELECTRICAL – HEAT MOCP	ELECTRICAL – CONTROLS POWER	WEIGHT (lbs)	REMARKS
AHU	40	DAIKIN APPLIED	CAH044GDAM	INDOOR HORIZTONAL AHU WITH STACKED SUPPLY FAN	22000	40.00	3600	2.00	4	95	902.0	616.0	80	67	54	54	166	27	42	52.9	22000	150.0	512.2	56	21.5	77	480	3	60	53	70	181	200	120V	7100	NOTE 1, 2, 3, 4, 5

REMARKS:
1.) UNIT SHALL BE CONSTRUCTED WITH 24 GAUGE DOUBLE WALL GALVANIZED STEEL INJECTED WITH MINIMUM R-13 FOAM INSULATION WITH HINGED ACCESS DOORS ON ACCESSIBLE SIDE OF UNIT (SEE PLANS). PROVIDE WITH THE FOLLOWING SECTIONS: MIXING BOX, FILTER SECTION, ELECTRIC RESISTANCE PREHEAT COIL, CHILLED WATER COIL, STACKED VARIABLE SPEED PLENUM SUPPLY FAN WITH SPRING ISOLATORS AND HORIZONTAL FRONT DISCHARGE. EXTERNAL STATIC PRESSURE INCLUDES ALL LOSSES UPSTREAM OF MIXING BOX OR INTAKE CONTROL DAMPERS AND DOWNSTREAM OF FAN DISCHARGE. PROVIDE WITH BASE RAIL.
2.) PROVIDE UNIT WITH NON-FUSED DISCONNECT(S). MECHANICAL CONTRACTOR SHALL FURNISH DISCONNECT SWITCH TO ELECTRICAL CONTRACTOR FOR INSTALLATION. NOTE THAT THERE WILL BE 3 ELECTRICAL CONNECTIONS-480v FOR FAN, 480v FOR HEATER AND 120v FOR CONTROLS/LIGHTS. DAMPER ACTUATORS TO BE COMPATABLE WITH TEMPERATURE CONTROLS.
3.) PROVIDE WITH RETURN AIR SMOKE DETECTOR AND WIRE FOR UNIT SHUTDOWN.
4.) PROVIDE VARIABLE FREQUENCE DRIVE COMPATIBLE WITH TEMPERATURE CONTROLS FOR SUPPLY FAN. DRIVE TO BE PROVIDED WITH BACnet CARD.
5.) UNIT SHALL BE DELIVERED IN PIECES THAT CAN FIT WITHIN A 4'-0" DOOR AND ASSEMBLED, WIRED, TESTED, ETC. ON SITE WITHIN MECHANICAL ROOM.

UNIT DIMENSIONS TO BE Max. length 167", Max. width 104", Max. Height 137". CONTRACTOR TO FIELD VERIFY AVAILABLE SPACE FOR UNIT INSTALLATION.

AIR TERMINAL SCHEDULE 1

MARK	MANUFACTURER	MODEL NO.	DESCRIPTION	FACE SIZE	NECK SIZE	MOUNTING TYPE	FINISH	REMARKS
A	EH PRICE	SCD SERIES	SQUARE CONE DIFFUSER	24"x24"	10"Ø	T-BAR	WHITE	
B	EH PRICE	SCD SERIES	SQUARE CONE DIFFUSER	24"x24"	8"Ø	T-BAR	WHITE	
C	EH PRICE	SCD SERIES	SQUARE CONE DIFFUSER	12"x12"	6"Ø	SURFACE	WHITE	NOTE 1
D	EH PRICE	PDDR	PERFORATED FACE	12"x12"	10"x10"	SURFACE	WHITE	NOTE 1
E	EH PRICE	SDAI-150	LINEAR 4-SLOT DIFFUSER 1.5"	48"x8"	10"Ø	EXPOSED	WHITE	NOTE 3, 4
F	EH PRICE	520 SERIES	LOUVER FACE SUPPLY GRILLE	20"x8"	18"x6"	SURFACE	WHITE	NOTE 2
G	EH PRICE	520 SERIES	LOUVER FACE SUPPLY GRILLE	14"x8"	12"x6"	SURFACE	WHITE	NOTE 2
H	EH PRICE	PDDR SERIES	PERFORATED FACE RETURN	24"x24"	22"x22"	T-BAR	WHITE	
I	EH PRICE	SDAI-100	LINEAR 3-SLOT DIFFUSER 1"	48"x5.5"	10"Ø	T-BAR	WHITE	NOTE 3, 4
J	EH PRICE	SCD SERIES	SQUARE CONE DIFFUSER	24"x24"	12"Ø	T-BAR	WHITE	
K	EH PRICE	535 SERIES	LOUVER FACE RETURN GRILLE	110"x80"	108"x78"	SURFACE	WHITE	
L	EH PRICE	SDA-100	LINEAR 3-SLOT DIFFUSER 1"	48"x5.5"	-	SURFACE	WHITE	NOTE 4
M	EH PRICE	SDA-100	LINEAR 3-SLOT DIFFUSER 1"	48"x5.5"	10"Ø	SURFACE	WHITE	NOTE 3, 4

REMARKS:
1.) PROVIDE WITH PLASTER FRAME.
2.) PROVIDE WITH OPPOSED BLADE DAMPER.
3.) PROVIDE WITH INSULATED PLENUM.
4.) PROVIDE WITH TYPE X END CONFIGURATION AND TYPE 2 FLANGED FRAME.

DUCT SILENCER SCHEDULE

MARK	#	MANUFACTURER	MODEL	SYSTEM	CFM	INLET HEIGHT	INLET WIDTH	INLET LENGTH	OUTLET HEIGHT	OUTLET WIDTH	OUTLET LENGTH	CENTER LINE TOTAL LENGTH	OVERALL WIDTH	VELOCITY (FPM)	MAX. P.D. (in wg)	63	125	250	500	1000	2000	4000	8000	REMARKS
SDAT	1	EH PRICE	ERMX144/8C	AHU-40	22000	36"	44"	82"	36"	44"	118"	144"	22"	2000	0.27"	18	22	33	54	54	49	42	34	NOTE 1

(DIMENSIONS: INLET / OUTLET / CENTER LINE TOTAL LENGTH / OVERALL WIDTH; MINIMUM DYNAMIC INSERTION LOSS, dB – OCTAVE BAND CENTER FRQUENCY, Hz: 63–8000)

REMARKS: 1.) PROVIDE WITH 2" SLIP CONNECTION ON EACH END, GLASS FIBER ACOUSTIC MEDIA, 18GA GALVANIZED CASING AND 22 GA GALVANIZED PERFORATED LINER.

EXHAUST FAN SCHEDULE

MARK	#	MANUFACTURER	MODEL NO.	FLOW (cfm)	WATTS	RPM	E.S.P. (in-wg)	TYPE	DRIVE	VOLTS	ø	HZ	WEIGHT (lbs.)	CONTROLS NOTES	REMARKS
EF	1	GREENHECK	SP-A90-VG	100	24	887	0.50	CEILING	DIRECT	120	1	60	12	LIGHTS	NOTE 1

REMARKS: 1.) PROVIDE WITH GRILLE, BACKDRAFT DAMPER, SPRING ISOLATION HANGERS, PLUG TYPE DISCONNECT, RDC-8 ROUND DUCT ADAPTER AND WALL CAP SIMILAR TO WC-8.

OUTSIDE AIR SCHEDULE 1

EQUIPMENT	ROOM DATA – NAME	#	AREA	OUTSIDE AIR – # OF PEOPLE	CFM PER PERSON	CFM PER SQ/FT	REQUIRED CFM	PROVIDED CFM	EXHAUST – CFM PER FIXTURE	NUMBER OF FIXTURES	REQUIRED CFM	PROVIDED CFM
AHU-40	BABYSCAPE	103	Not Enclosed	20	7.5 CFM	0.06 CFM		190	0 CFM	0		0
AHU-40	FAMILY RESTROOM	105	Not Enclosed	0	5 CFM	0.06 CFM		15	50 CFM	2		100
AHU-40	MOTHER'S ROOM	106	63 SF	1	5 CFM	0.06 CFM	9	10	0 CFM	0	0	0
AHU-40	PRETEND PLAY	158	475 SF	20	7.5 CFM	0.06 CFM	179	185	0 CFM	0	0	0
AHU-40	VISITOR AMENITIES	159	278 SF	15	7.5 CFM	0.06 CFM	130	130	0 CFM	0	0	0
AHU-40	GROSS MOTOR	160	1438 SF	60	7.5 CFM	0.06 CFM	537	540	0 CFM	0	0	0
AHU-40	ENTRY	200	78 SF	0	5 CFM	0.06 CFM	10	10	0 CFM	0	0	0
AHU-40	PAINT ROOM	201	150 SF	8	7.5 CFM	0.06 CFM	70	70	0 CFM	0	0	0
AHU-40	SAND ROOM	202	229 SF	10	7.5 CFM	0.06 CFM	89	90	0 CFM	0	0	0
AHU-40	TODDLER EXPLORATION	203	320 SF	15	7.5 CFM	0.06 CFM	133	150	0 CFM	0	0	0
AHU-40	PROGRAM SPACE	204	484 SF	25	7.5 CFM	0.06 CFM	218	220	0 CFM	0	0	0
AHU-40	STAFF PREP AREA	205	125 SF	2	7.5 CFM	0.06 CFM	23	25	0 CFM	0	0	0
AHU-40	EGRESS ACCESS	206	68 SF	0	5 CFM	0.06 CFM	10	10	0 CFM	0	0	0
AHU-40	VESTIBULE	207	137 SF	0	5 CFM	0.06 CFM	9	10	0 CFM	0	0	0
AHU-40	ALL ABOARD EXHIBIT HALL	301	5763 SF	175	7.5 CFM	0.06 CFM	1659	1700	0 CFM	0	0	0
AHU-40	MODEL TRAIN ROOM	302	650 SF	25	7.5 CFM	0.06 CFM	228	230	0 CFM	0	0	0
AHU-40	SERVICE CORRIDOR	303	251 SF	0	5 CFM	0.06 CFM	16	15	0 CFM	0	0	0
AHU-40			10508 SF	377			3318	3600			0	100

FAN POWERED BOX-ELECTRIC HEAT SCHEDULE

MARK	#	MANUFACTURER	MODEL NO.	FAN SIZE	INLET (_"ø)	Fan CFM	COOL (cfm)	HEAT (cfm)	HP	MIN LIMIT (cfm)	kW	TOTAL (mBtu/h)	E.A.T. (°F)	ΔT (°F)	L.A.T. (°F)	STAGES	MAX NC @ (1in-wc)	OUTLET SIZE	VOLTS	ø	HZ	REMARKS
FPB	1	EH PRICE	FDV SERIES	20	7	285	540	350	0.50	65	3.0	10.2	63	27.0	90	0	40	12"x10"	480	3	60	NOTE 1
FPB	2	EH PRICE	FDV SERIES	30	12	750	1500	975	0.50	225	10.0	34.1	63	32.3	95	0	40	14"x12.5"	480	3	60	NOTE 1
FPB	3	EH PRICE	FDV SERIES	20	10	520	1040	675	0.50	155	7.0	23.9	63	32.6	96	0	40	12"x10"	480	3	60	NOTE 1
FPB	4	EH PRICE	FDV SERIES	20	10	640	1280	830	0.50	190	8.0	27.3	63	30.3	93	0	40	12"x10"	480	3	60	NOTE 1
FPB	5	EH PRICE	FDV SERIES	20	8	365	730	475	0.50	110	5.0	17.1	63	33.1	96	0	40	12"x10"	480	3	60	NOTE 1
FPB	6	EH PRICE	FDV SERIES	20	7	255	495	320	0.50	65	3.0	10.2	63	29.5	93	0	40	12"x10"	480	3	60	NOTE 1
FPB	7	EH PRICE	FDV SERIES	50	16	1575	3155	2050	1.00	475	20.0	68.3	63	30.7	94	0	40	20"x17.5"	480	3	60	NOTE 1
FPB	8	EH PRICE	FDV SERIES	30	12	750	1500	975	0.50	225	10.0	34.1	63	32.3	95	0	40	14"x12.5"	480	3	60	NOTE 1
FPB	9	EH PRICE	FDV SERIES	30	12	685	1370	890	0.50	205	9.0	30.7	63	31.8	95	0	40	14"x12.5"	480	3	60	NOTE 1
FPB	10	EH PRICE	FDV SERIES	20	8	360	720	470	0.50	110	5.0	17.1	65	33.5	98	0	40	12"x10"	480	3	60	NOTE 1
FPB	11	EH PRICE	FDV SERIES	20	9	400	800	520	0.50	120	5.0	17.1	65	30.3	95	0	40	12"x10"	480	3	60	NOTE 1
FPB	12	EH PRICE	FDV SERIES	30	12	700	1500	910	0.50	210	9.0	30.7	65	31.1	96	0	40	14"x12.5"	480	3	60	NOTE 1
FPB	13	EH PRICE	FDV SERIES	30	12	750	1600	975	0.50	225	10.0	34.1	65	32.3	97	0	40	14"x12.5"	480	3	60	NOTE 1
FPB	14	EH PRICE	FDV SERIES	30	12	750	1500	975	0.50	225	10.0	34.1	65	32.3	97	0	40	14"x12.5"	480	3	60	NOTE 1
FPB	15	EH PRICE	FDV SERIES	30	12	750	1640	975	0.50	225	10.0	34.1	65	32.3	97	0	40	14"x12.5"	480	3	60	NOTE 1
FPB	16		FUTURE	20	8	0	750	0	0.50	0	0.0	0.0	0			0	40	12"x10"	480	3	60	
FPB	17		FUTURE	20	10	0	1000	0	0.50	0	0.0	0.0	0			0	40	12"x10"	480	3	60	
FPB	18		FUTURE	20	10	0	1000	0	0.50	0	0.0	0.0	0			0	40	12"x10"	480	3	60	
							22120			2830		423.4										

REMARKS: 1.) PROVIDE WITH ECM MOTOR, INTEGRAL DISCONNECT SWITCH, FACTORY INSTALLED PRESSURE INDEPENDENT DDC CONTROL PACKAGE, SCR CONTROLLED ELECTRIC RESISTANCE HEATING COIL ON SUPPLY AIR DUCT (100°F MAX DISCHARGE AIR TEMPERATURE AND 450 FPM MINIMUM COIL FACE VELOCITY) AND FILTER FRAME WITH 1" THROWAWAY FILTERS.

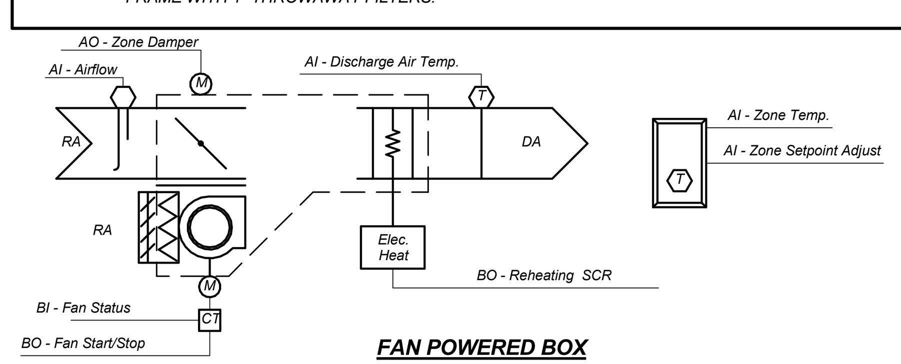

FAN POWERED BOX

RUN CONDITIONS - SCHEDULED:
THE UNIT SHALL RUN ACCORDING TO A USER DEFINABLE TIME SCHEDULE IN THE FOLLOWING MODES:
· OCCUPIED MODE: THE UNIT SHALL MAINTAIN
· A 74°F (ADJ.) COOLING SETPOINT
· A 70°F (ADJ.) HEATING SETPOINT.
· UNOCCUPIED MODE (NIGHT SETBACK): THE UNIT SHALL MAINTAIN
· A 85°F (ADJ.) COOLING SETPOINT.
· A 55°F (ADJ.) HEATING SETPOINT.
ALARMS SHALL BE PROVIDED AS FOLLOWS:
· HIGH ZONE TEMP: IF THE ZONE TEMPERATURE IS GREATER THAN THE COOLING SETPOINT BY A USER DEFINABLE AMOUNT (ADJ.).
· LOW ZONE TEMP: IF THE ZONE TEMPERATURE IS LESS THAN THE HEATING SETPOINT BY A USER DEFINABLE AMOUNT (ADJ.).
UNIT SHALL INTERLOCK WITH RESPECTIVE AHU SMOKE SHUT-DOWN OPERATION.

REVERSING VARIABLE VOLUME TERMINAL UNIT - FLOW CONTROL:
THE UNIT SHALL MAINTAIN ZONE SETPOINTS BY CONTROLLING THE AIRFLOW THROUGH ONE OF THE FOLLOWING:
OCCUPIED:
· WHEN ZONE TEMPERATURE IS GREATER THAN ITS COOLING SETPOINT, THE ZONE DAMPER SHALL MODULATE BETWEEN THE MINIMUM OCCUPIED AIRFLOW (ADJ.) AND THE MAXIMUM COOLING AIRFLOW (ADJ.) UNTIL THE ZONE IS SATISFIED.
· WHEN THE ZONE TEMPERATURE IS BETWEEN THE COOLING SETPOINT AND THE HEATING SETPOINT, THE ZONE DAMPER SHALL MAINTAIN THE MINIMUM REQUIRED ZONE VENTILATION (ADJ.).
· WHEN ZONE TEMPERATURE IS LESS THAN ITS HEATING SETPOINT, THE CONTROLLER SHALL ENABLE HEATING TO MAINTAIN THE ZONE TEMPERATURE AT ITS HEATING SETPOINT. ADDITIONALLY, IF WARM AIR IS AVAILABLE FROM THE AHU, THE ZONE DAMPER SHALL MODULATE BETWEEN THE MINIMUM OCCUPIED AIRFLOW (ADJ.) AND THE MAXIMUM HEATING AIRFLOW (ADJ.) UNTIL THE ZONE IS SATISFIED.
UNOCCUPIED:
· WHEN THE ZONE IS UNOCCUPIED THE ZONE DAMPER SHALL CONTROL TO ITS MINIMUM UNOCCUPIED AIRFLOW (ADJ.).
· WHEN THE ZONE TEMPERATURE IS GREATER THAN ITS COOLING SETPOINT, THE ZONE DAMPER SHALL MODULATE BETWEEN THE MINIMUM UNOCCUPIED AIRFLOW (ADJ.) AND THE MAXIMUM COOLING AIRFLOW (ADJ.) UNTIL THE ZONE IS SATISFIED.
· WHEN THE ZONE TEMPERATURE IS LESS THAN ITS UNOCCUPIED HEATING SETPOINT, THE CONTROLLER SHALL ENABLE HEATING TO MAINTAIN THE ZONE TEMPERATURE AT THE SETPOINT. ADDITIONALLY, IF WARM AIR IS AVAILABLE FROM THE AHU, THE ZONE DAMPER SHALL MODULATE BETWEEN THE MINIMUM UNOCCUPIED AIRFLOW (ADJ.) AND THE AUXILIARY HEATING AIRFLOW (ADJ.) UNTIL THE ZONE IS SATISFIED.
FAN CONTROL - PARALLEL:
THE FAN SHALL RUN WHENEVER THE ZONE CONTROLLER CALLS FOR HEAT. THE FAN SHALL RUN FOR A MINIMUM USER DEFINABLE TIME (ADJ.).
ELECTRIC REHEATING:
THE CONTROLLER SHALL MEASURE THE ZONE TEMPERATURE AND STAGE THE REHEATING TO MAINTAIN ITS SETPOINT. TO PREVENT SHORT CYCLING, THERE SHALL BE A USER DEFINABLE (ADJ.) DELAY BETWEEN STAGES, AND EACH STAGE SHALL HAVE A USER DEFINABLE (ADJ.) MINIMUM RUNTIME.
THE REHEATING SHALL BE ENABLED WHENEVER:
THE ZONE TEMPERATURE IS BELOW SETPOINT.
· AND SUFFICIENT AIRFLOW IS PROVIDED.
DISCHARGE AIR TEMPERATURE:
THE CONTROLLER SHALL MONITOR THE DISCHARGE AIR TEMPERATURE.
FAN STATUS FEEDBACK:
THE FAN STATUS SHALL BE MONITORED.
ALARMS SHALL BE PROVIDED AS FOLLOWS:
· FAN FAILURE: COMMANDED ON, BUT THE STATUS IS OFF.
· FAN IN HAND: COMMANDED OFF, BUT THE STATUS IS ON.
FILTER HOURS:
THE CONTROLLER SHALL MONITOR THE FAN RUNTIME.
ALARMS SHALL BE PROVIDED AS FOLLOWS:
· FILTER CHANGE REQUIRED: FILTER HAS BEEN IN USE FOR MORE THAN 2200 HRS (ADJ.).

* ZONE TEMPERATURE SHALL NOT DISPLAY IN ZONE.

1 CONTROLS DIAGRAM - FAN POWERED BOX
SCALE: NONE

COORDINATE ALL TEMPERATURE CONTROLS WORK WITH BCS CONTROLS

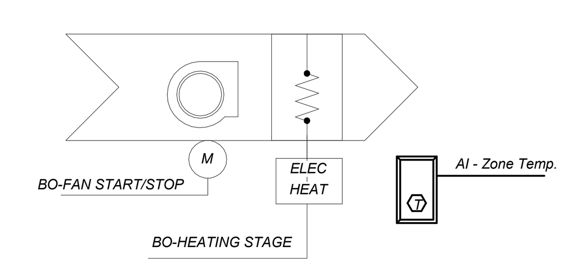

CABINET UNIT HEATER SEQUENCE OF OPERATION
CUH-1, 2, 3

UNIT SHALL OPERATE BASED ON A TIME OF DAY SCHEDULE-- OCCUPIED/UNOCCUPIED AS DEFINED BY OWNER. PROVIDE ALL CONTROLS, ACTUATORS, DEVICES, WIRING, SENSORS, ETC. TO PERFORM THE FOLLOWING SEQUENCE.

UNOCCUPIED
FAN AND HEATER SHALL BE OFF. IF SPACE TEMPERATURE DROPS BELOW 65°F THE SPACE UNOCCUPIED SETPOINT THE UNIT SHALL RUN AS DESCRIBED BELOW TO SATISFY UNOCCUPIED SETPOINT.

OCCUPIED
UPON A CALL FOR HEATING (BELOW 70°F) THE SUPPLY FAN SHALL START AND THE HEATER SHALL OPERATE TO SATISFY THE OCCUPIED HEATING SETPOINT (72°F).

ALARMS SHALL BE PROVIDED AS FOLLOWS:
•LOW ZONE TEMP: IF THE ZONE TEMPERATURE IS LESS THAN THE HEATING SETPOINT BY A USER DEFINABLE AMOUNT (ADJ.).

ELECTRIC HEATING STAGE:
THE CONTROLLER SHALL MEASURE THE ZONE TEMPERATURE AND STAGE THE HEATING TO MAINTAIN ITS HEATING SETPOINT. TO PREVENT SHORT CYCLING, THE STAGE SHALL HAVE A USER DEFINABLE (ADJ.) MINIMUM RUNTIME.

THE HEATING SHALL BE ENABLED WHENEVER:
•OUTSIDE AIR TEMPERATURE IS LESS THAN 65°F (ADJ.).
•AND THE ZONE TEMPERATURE IS BELOW HEATING SETPOINT.
•AND THE FAN IS ON.

2 CONTROLS DIAGRAM - CUH
SCALE: NONE

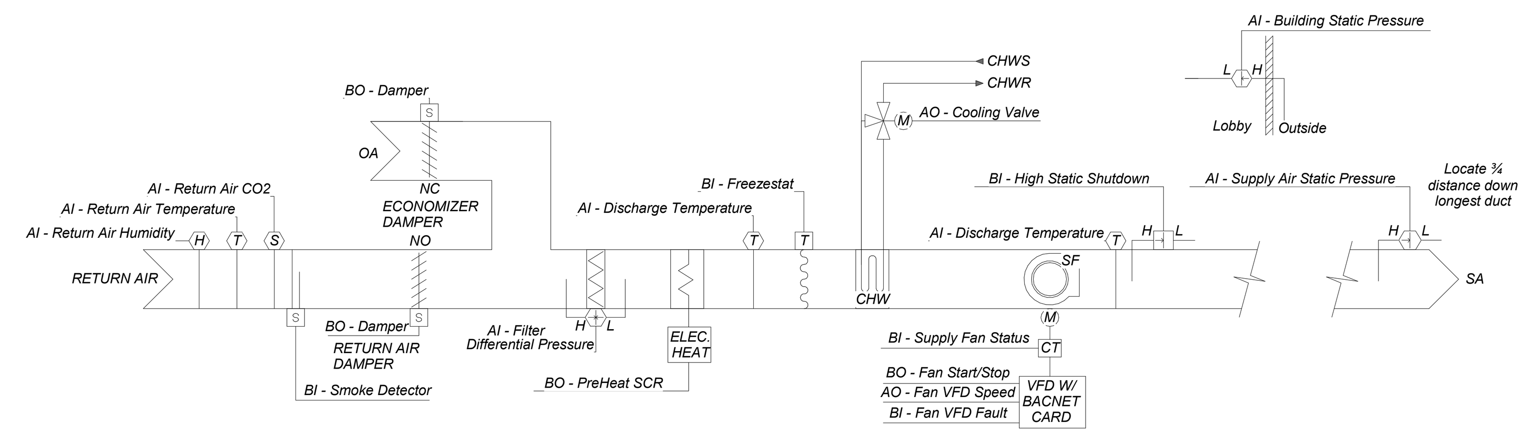

AIR HANDLING UNIT (AHU-40)

THE UNIT SHALL BE SCHEDULED TO RUN WHENEVER:
· ANY ZONE IS OCCUPIED.
· OR A DEFINABLE NUMBER OF UNOCCUPIED ZONES NEED HEATING OR COOLING.
· OR SHOULD OCCUPANCY BE DESIRED DURING THE UNOCCUPIED EACH SYSTEM MAY BE OPERATED IN THE OCCUPIED MODE FROM THE ZONE SENSOR REQUESTED OVERIDE FOR A PERIOD OF 1-HOUR.

UNOCCUPIED MODE:
· THE UNIT SUPPLY FAN WILL CYCLE TO MATINAIN UNOCUCPIED ZONE HEATING AND ZONE COOLING TEMPERATURE SETPOINT DURING UNOCCUPIED PERIODS.
· OUTSIDE AIR INTAKE/ECONOMIZER SHALL BE CLOSED.

SYSTEM SHALL HAVE A MORNING WARM-UP/COOLING DOWN SEQUENCE. SYSTEM SHALL OPTIMIZE START TIME. OUTDOOR AIR DAMPERS SHALL REMAIN CLOSED UNLESS BENEFICIAL FOR OPTIMIZING SEQUENCE.

THE INTAKE DAMPER SHALL CLOSE AND THE RETURN AIR DAMPER SHALL OPEN WHEN THE UNIT IS OFF.

HIGH STATIC SHUTDOWN:
THE UNIT SHALL SHUT DOWN AND GENERATE AN ALARM UPON RECEIVING AN HIGH STATIC SHUTDOWN SIGNAL.

FREEZE PROTECTION:
THE UNIT SHALL SHUT DOWN AND GENERATE AN ALARM UPON RECEIVING A FREEZESTAT STATUS.

SMOKE DETECTION:
THE UNIT SHALL SHUT DOWN AND GENERATE AN ALARM UPON RECEIVING A SMOKE DETECTOR STATUS. SMOKE SHUT DOWN SHALL BE A PART OF THE ELECTRICAL DIVISION.

AHU FANS:
THE SUPPLY FAN SHALL RUN ANYTIME THE UNIT IS COMMANDED TO RUN, UNLESS SHUTDOWN ON SAFETIES. TO PREVENT SHORT CYCLING, THE FAN SHALL HAVE A USER DEFINABLE (ADJ.) MINIMUM RUNTIME.
PROVIDE A TIME DELAY SO THAT ALL CONTROL DAMPERS ARE POSITIONED PRIOR TO FANS STARTING BY 30 SECONDS.
ALARMS SHALL BE PROVIDED AS FOLLOWS:
· SUPPLY FAN FAILURE: COMMANDED ON, BUT THE STATUS IS OFF.
·SUPPLY FAN IN HAND: COMMANDED OFF, BUT THE STATUS IS ON.

MINIMUM OUTSIDE AIR VENTILATION:
WHEN IN THE OCCUPIED MODE, THE CONTROLLER SHALL MEASURE THE RETURN AIR CO2 LEVELS AND THE OUTSIDE AIR DAMPER SHALL OPEN. ALARMS SHALL BE PROVIDED AS FOLLOWS:
· HIGH RETURN AIR CARBON DIOXIDE CONCENTRATION: IF THE RETURN AIR CO2 CONCENTRATION IS GREATER THAN 1000 PPM (ADJ.).

CO2 SPACE SENSOR SHALL CONTROL THE POSITION OF THE OUTSIDE AIR DAMPER. THE OCCUPIED MAXIMUM AND MINIMUM POSITIONS SHALL BE SET FOR CFM INDICATED IN THE OUTSIDE AIR SCHEDULE. WHEN CO2 LEVELS EXCEED 800PPM THE OUTSIDE AIR DAMPER SHALL BE FULLY OPENED UNTIL IT DROPS TO 700PPM. BETWEEN CO2 LEVELS OF 0-800 PPM OUTSIDE AIR DAMPER SHALL BE SET TO MINIMUM POSITION.

SUPPLY AIR DUCT STATIC PRESSURE CONTROL:
THE CONTROLLER SHALL MEASURE DUCT STATIC PRESSURE AND MODULATE THE SUPPLY FAN VFD SPEED TO MAINTAIN A DUCT STATIC PRESSURE SETPOINT. THE SPEED SHALL NOT DROP BELOW 30% (ADJ.).
ALARMS SHALL BE PROVIDED AS FOLLOWS:
· HIGH SUPPLY AIR STATIC PRESSURE: IF THE SUPPLY AIR STATIC PRESSURE IS 25% (ADJ.) GREATER THAN SETPOINT. FAN SHALL SHUT-DOWN IF STATIC PRESSURE IS 200% ABOVE SETPOINT.
· LOW SUPPLY AIR STATIC PRESSURE: IF THE SUPPLY AIR STATIC PRESSURE IS 25% (ADJ.) LESS THAN SETPOINT.
· SUPPLY FAN VFD FAULT.

PREHEAT COIL:
THE PREHEAT ELECTRIC HEATER SHALL MODULATE TO MAINTAIN THE MIXED AIR TEMPERATURE SETPOINT (55°F ADJUSTABLE). WHEN THE UNIT IS SHUTDOWN, THE PREHEAT COIL WILL BE COMMANDED OFF UNLESS THE MIXED AIR TEMPERATURE FALLS BELOW THE LOW AIR TEMPERATURE SETPOINT.

2-HOURS PRIOR TO BUILDING SCHEDULED START THE UNIT SHALL BE SET TO MORNING WARM UP MODE. IF THE RETURN AIR TEMPERATURE IS LESS THAN 65°F THE ELECTRIC HEATER SHALL MODULATE AND ALL VAV AND FPB BOXES WITH HEATERS SHALL BE OPENED TO THEIR MAXIMUM POSITION UNTIL RETURN AIR TEMPERATURE SETPOINT IS ACHIEVED.
THE HEATING SHALL BE ENABLED WHENEVER:
· OUTSIDE AIR TEMPERATURE IS LESS THAN 50°F (ADJ.).
· AND THE SUPPLY FAN STATUS IS ON.
· AND THE COOLING IS NOT ACTIVE.
· AND ECONOMIZER IS NOT ACTIVE.
ALARMS SHALL BE PROVIDED AS FOLLOWS:
· LOW RETURN AIR TEMP: IF THE SUPPLY AIR OR RETURN AIR TEMPERATURE IS 5°F (ADJ.) LESS THAN SETPOINT.

PREHEAT TEMPERATURE SETPOINT OUTSIDE AIR RESET:
THE CONTROLLER SHALL MONITOR THE PREHEAT SUPPLY AIR TEMPERATURE AND SHALL MAINTAIN A SUPPLY AIR TEMPERATURE SETPOINT RESET BASED ON OUTSIDE AIR TEMPERATURE. THE SUPPLY AIR TEMPERATURE SETPOINT SHALL RESET FOR HEATING AS FOLLOWS:
· AS OUTSIDE AIR TEMPERATURE DROPS FROM 45°F (ADJ.) TO -10°F (ADJ.)
THE SUPPLY AIR TEMPERATURE SETPOINT SHALL RESET UPWARDS FROM 45°F (ADJ.) TO 60°F (ADJ.).

LOW PREHEAT DISCHARGE AIR TEMPERATURE SHUTDOWN:
IF THE PREHEAT DISCHARGE AIR TEMPERATURE FALLS BELOW 35°F (ADJ) THE INTAKE DAMPERS WILL CLOSE, AN ALARM WILL BE GENERATED. THE LOW PREHEAT TEMPERATURE ALARM WILL REQUIRE A MANUAL NETWORK RESET.

AHU COOLING COIL:
THE CONTROLLER SHALL MEASURE THE SUPPLY AIR TEMPERATURE AND MODULATE THE CHILLED WATER VALVE TO MAINTAIN THE DISCHARGE AIR TEMPERATURE SETPOINT 55°F (ADJ.). 2-HOURS PRIOR TO BUILDING SCHEDULED START THE UNIT SHALL BE SET TO MORNING COOL DOWN MODE. THE COOLING SHALL BE STAGED AND ALL VAV AND FPB BOXES SHALL BE OPENED TO THEIR MAXIMUM POSITION UNTIL BUILDING TEMPERATURE SETPOINT IS ACHIEVED. WHEN THE UNIT IS SHUTDOWN, THE CHILLED WATER VALVE WILL BE COMMANDED CLOSED.

THE COOLING SHALL BE ENABLED WHENEVER:
· OUTSIDE AIR TEMPERATURE IS GREATER THAN 60°F (ADJ.).
· AND THE SUPPLY AIR TEMPERATURE IS ABOVE COOLING SETPOINT.
· OR THE ZONE TEMPERATURE IS ABOVE COOLING SETPOINT.
· AND THE FAN STATUS IS ON.
· THE COOLING COIL VALVE SHALL OPEN TO 50% (ADJ.) WHENEVER THE FREEZESTAT IS ON.
· AND ECONOMIZER IS DISABLED OR DAMPER IS CLOSED.
· AND HEATING IS NOT ACTIVE.
· OR THE UNOCCUPIED TEMPERATURE IN ANY ZONE EXCEEDS 85°F (ADJ.) UNTIL NIGHTSETBACK TEMPERATURE IS SATISFIED. OUTSIDE AIR DAMPER SHALL BE CLOSED UNLESS BENEFICIAL FOR COOLING.

ALARMS SHALL BE PROVIDED AS FOLLOWS:
· HIGH SUPPLY AIR TEMP: IF THE SUPPLY AIR TEMPERATURE IS 5°F (ADJ.) GREATER THAN SETPOINT.
· LOW SUPPLY AIR TEMP: IF THE SUPPLY AIR TEMPERATURE IS 5°F (ADJ.) LOWER THAN SETPOINT.

ECONOMIZER:
DURING THE ECONOMIZER CYCLE, THE INTAKE DAMPER (NC) AND THE RETURN AIR DAMPER (NO) SHALL BE MODULATED TO MAINTAIN DISCHARGE AIR AT IS SETTING (55°F). THE CONTROLLER SHALL MEASURE THE MIXED AIR TEMPERATURE AND MODULATE THE INTAKE AND RETURN DAMPERS IN SEQUENCE TO MAINTAIN A SETPOINT 2°F (ADJ.) LESS THAN THE SUPPLY AIR TEMPERATURE SETPOINT. THE INTAKE AIR DAMPERS SHALL MAINTAIN A MINIMUM ADJUSTABLE POSITION AS DESCRIBED ABOVE.

THE ECONOMIZER SHALL BE ENABLED WHENEVER:
· OUTSIDE AIR TEMPERATURE IS LESS THAN 65°F (ADJ.).
· AND THE OUTSIDE AIR ENTHALPY IS LESS THAN 22BTU/LB (ADJ.)
· AND THE OUTSIDE AIR TEMPERATURE IS LESS THAN THE RETURN AIR TEMPERATURE.
· AND THE OUTSIDE AIR ENTHALPY IS LESS THAN THE RETURN AIR ENTHALPY.
· AND THE SUPPLY FAN STATUS IS ON.
THE ECONOMIZER SHALL BE DISABLED WHENEVER:
· MIXED AIR TEMPERATURE DROPS FROM 40°F TO 35°F (ADJ.)
· OR ON LOSS OF SUPPLY FAN STATUS.
· OR OUTDOOR AIR HUMIDITY EXCEED 80% RH AND THE OUTDOOR AIR TEMPERATURE IS ABOVE 50°F.

AHU DEHUMIDIFICATION:
THE CONTROLLER SHALL MEASURE THE RETURN AIR HUMIDITY AND OVERRIDE CONTROL OF THE COOLING COIL VALVE WHEN THE RETURN AIR HUMIDITY SENSOR IS ABOVE SETPOINT (55% ADJUSTABLE). THE CONTROLLER SHALL MODULATE THE CHILLED WATER VALVE TO MAINTAIN HUMIDITY SETPOINT.
ALARMS SHALL BE PROVIDED AS FOLLOWS:
· HIGH RETURN AIR HUMIDITY: IF THE HUMIDITY IS 10% (ADJ.) GREATER THAN SETPOINT.
· LOW RETURN AIR HUMIDITY: IF THE HUMIDITY IS 10% (ADJ.) LOWER THAN SETPOINT.

AHU DIFFERENTIAL PRESSURE MONITOR:
THE CONTROLLER SHALL MONITOR THE DIFFERENTIAL PRESSURE ACROSS THE PREFILTER.
ALARMS SHALL BE PROVIDED AS FOLLOWS:
· FILTER CHANGE REQUIRED: PREFILTER DIFFERENTIAL PRESSURE EXCEEDS A USER DEFINABLE LIMIT (ADJ.).

RETURN AIR TEMPERATURE:
THE CONTROLLER SHALL MONITOR THE RETURN AIR TEMPERATURE AND USE AS REQUIRED FOR SETPOINT CONTROL OR ECONOMIZER CONTROL (IF PRESENT).
ALARMS SHALL BE PROVIDED AS FOLLOWS:
· HIGH RETURN AIR TEMP: IF THE RETURN AIR TEMPERATURE IS GREATER THAN 90°F (ADJ.).
· LOW RETURN AIR TEMP: IF THE RETURN AIR TEMPERATURE IS LESS THAN 45°F (ADJ.).

3 CONTROLS DIAGRAM - AHU
SCALE: NO SCALE

PROJECT DESIGN CRITERIA

LOCATION:	KANSAS CITY, MO
COOLING:	
DESIGN OUTSIDE TEMPERATURES:	99°F DB, 75°F WB
DESIGN INSIDE TEMPERATURES:	74°F, 50% RH
HEATING:	
DESIGN OUTSIDE TEMPERATURE:	2°F
DESIGN INSIDE TEMPERATURE ALL OCCUPIED AREAS:	72°F
OUTSIDE AIR QUANTITY: PER ASHRAE 62.1 2010 INCLUDING LATEST ADDENDUMS:	N/A
EXHAUST AIR QUANTITY: PUBLIC TOILETS:	N/A
INTERNAL LOAD ALLOWANCE:	
LIGHTS:	1.0 WATTS PER SQUARE FOOT
120 VOLT POWER:	0.5 WATTS PER SQUARE FOOT
EXTERNAL ALLOWANCE:	N/A

MECHANICAL SYMBOLS

- OR — NEW DUCTWORK
- SUPPLY DUCT
- RETURN OR EXHAUST DUCT
- SUPPLY DIFFUSER
- RETURN GRILLE
- R / R/D — RISE OR DROP IN DUCT
- MANUAL VOLUME DAMPER
- SUPPLY DUCT DOWN
- SUPPLY DUCT UP
- WALL MOUNTED DIFFUSER/GRILLE
- FLEXIBLE DUCT CONNECTION
- T — THERMOSTAT, MOUNT AT 48"AFF.
- F — FAN CONTROLLER, MOUNT AT 48"AFF.
- S — SENSOR, MOUNT AT 48"AFF.
- MD — MOTORIZED DAMPER
- FD — FIRE DAMPER
- A — SUPPLY DIFFUSER, RETURN OR EXHAUST GRILLE TYPE
- AHU 1 — EQUIPMENT TYPE AND DESIGNATION

CABINET UNIT HEATER-ELECTRIC HEAT SCHEDULE

MARK	#	MANUFACTURER	MODEL NO.	CFM	kW	TOTAL (mBtu/h)	VOLTS	ø	HZ	FLA (A)	REMARKS
CUH	1	QMARK	CWH-3000	100	2.0	6.8	277	1	60	7.3	NOTE 1
CUH	2	QMARK	CWH-3000	100	2.0	6.8	277	1	60	7.3	NOTE 1
CUH	3	QMARK	CWH-3000	100	2.0	6.8	277	1	60	7.3	NOTE 1
CUH	4	QMARK	CWH-3000	100	2.0	6.8	277	1	60	7.3	NOTE 1

(IDENTITY DATA: MARK – MODEL NO.; HEATING COIL DATA: kW, TOTAL; ELECTRICAL DATA: VOLTS, ø, HZ, FLA)

REMARKS: 1.) PROVIDE WITH DISCONNECT SWITCH, RECESSED MOUNTING FRAME AND RELAY FOR BMS INTERFACE.

GENERAL NOTES

A.) CONTRACTORS AND SUBCONTRACTORS SHALL CAREFULLY REVIEW THE CONSTRUCTION DOCUMENTS. INFORMATION REGARDING THE COMPLETE WORK IS DISPERSED THROUGHOUT THE DOCUMENT SET AND CAN NOT BE ACCURATELY DETERMINED WITHOUT REFERENCE TO THE COMPLETE DOCUMENT SET.

B.) COORDINATE WITH THE WORK OF OTHER SECTIONS, EQUIPMENT FURNISHED BY OTHERS, REQUIREMENT OF OWNER AND WITH THE CONSTRAINTS OF THE EXISTING CONDITIONS OF THE PROJECT SITE. PROVIDE DUCT RISES AND DROPS AS REQUIRED FOR FIELD INSTALLATION AND TRADE COORDINATION. NOTIFY ARCHITECT OF ANY DISCREPANCIES BEFORE BIDDING.

C.) DRAWINGS FOR HVAC WORK ARE DIAGRAMMATIC, SHOWING THE GENERAL LOCATION, TYPE, LAYOUT AND EQUIPMENT REQUIRED. THE DRAWINGS SHALL NOT BE SCALED FOR EXACT MEASUREMENT. REFER TO ARCHITECTURAL AND STRUCTURAL DRAWINGS FOR DIMENSIONS. REFER TO MANUFACTURER'S STANDARD INSTALLATION DRAWING FOR EQUIPMENT CONNECTIONS AND INSTALLATION REQUIREMENTS. PROVIDE DUCTWORK, CONNECTIONS, ACCESSORIES, OFFSETS AND MATERIALS NECESSARY FOR A COMPLETE SYSTEM.

D.) ALL WORK SHALL COMPLY WITH STATE AND LOCAL CODE REQUIREMENTS AS APPROVED AND AMENDED BY THE GOVERNING COUNTY, INCLUDING APPLICABLE SECTIONS OF NFPA, OSHA, BOCA, UBC, OR ANY INTERIM AMENDMENTS AT THE TIME OF THE PROPOSAL. PURCHASE ALL PERMITS ASSOCIATED WITH THE WORK. OBTAIN ALL INSPECTIONS REQUIRED BY CODE.

E.) DUCT SIZES INDICATED ARE FREE AREA SIZES. WHERE LINER IS SPECIFIED SHEET METAL SHALL BE INCREASED TO ACCOMMODATE THICKNESS OF LINER.

F.) REFER TO SPECIFICATIONS FOR ADDITIONAL REQUIREMENTS FOR CUTTING AND PATCHING OF FLOORS, WALLS, CEILING, ETC.

G.) ALL MATERIALS EXPOSED WITHIN DUCTS AND PLENUMS SHALL HAVE A FLAME SPREAD INDEX OF NOT MORE THAN 25 AND A SMOKE DEVELOPED RATING OF NOT MORE THAN 50 WHEN TESTED IN ACCORDANCE WITH THE TEST FOR SURFACE BURNING CHARACTERISTICS OF BUILDING MATERIALS, UBC STANDARD 8-1.

H.) ONLY PLENUM RATED PVC PIPING SHALL BE ALLOWED IN PLENUM.

I.) ROUND DUCT DIMENSIONS SHOWN ARE AIR SIDE RUNOUTS TO DIFFUSERS SHALL BE SAME SIZE AS DIFFUSER NECK UNLESS INDICATED OTHERWISE. LENGTH OF FLEXIBLE DUCTS ARE NOT TO EXCEED 5'-0".

J.) ALL NEW SMOKE DETECTORS ASSOCIATED WITH SMOKE DAMPERS AND HVAC SHUT-OFFS SHALL BE TESTED BY AN APPROVED TESTING AGENCY OR A QUALIFIED THIRD PARTY SPECIAL INSPECTOR. THE SPECIAL INSPECTOR/TESTING AGENCY SHALL BE AN INDEPENDENT THIRD PARTY INDIVIDUAL OR FIRM AND SHALL NOT BE THE INSTALLING CONTRACTOR. DUCT SMOKE DETECTORS SHALL BE CONNECTED TO THE BUILDING'S FIRE ALARM CONTROL PANEL. ACTIVATION OF A DUCT SMOKE DETECTOR SHALL INITIATE A VISIBLE AND AUDIBLE SUPERVISORY SIGNAL AT A CONSTANTLY ATTENDED LOCATION. DUCT SMOKE DETECTORS SHALL NOT BE USED AS A SUBSTITUTE FOR REQUIRED OPEN AREA DETECTION

K.) FIRE DAMPERS TO BE DYNAMIC RATED WITH SHUTTER OUT OF THE AIR STREAM.

L.) INSTALL DUCTWORK TIGHT TO STRUCTURE UNLESS NOTED OTHERWISE. COORDINATE DUCT ELEVATIONS WITH ARCHITECTURAL RCP AND ELEVATIONS. PROVIDE RISE/DROP AS NECESSARY TO KEEP DUCTWORK EXPOSED ABOVE CEILING.

M.) CONTRACTOR SHALL CAULK/SEAL EVERY WALL PENETRATION AS SPECIFIED BY ARCHITECT OR ENGINEER. WHERE WALL IS SMOKE/FIRE RATED CONTRACTOR SHALL PROVIDE REQUIRED U.L. FIRE STOP. IF THE ARCHITECTURAL AND MECHANICAL SPECIFICATIONS REGARDING CAULKING/SEALING ARE NOT CONSISTENT CONTRACTOR SHALL USE THE MOST STRINGENT.

N.) INTENT. BY SUBMITTING A BID THE CONTRACTOR ACCEPTS RESPONSIBILITY TO PROVIDE A COMPLETE HVAC SYSTEM BASED ON THE INTENT OF THESE DRAWINGS. THE DRAWINGS SHALL SERVE AS WORKING DRAWINGS FOR THE GENERAL LAYOUT OF THE VARIOUS ITEMS OF EQUIPMENT; ARE DIAGRAMMATIC; AND DO NOT NECESSARILY INDICATE EVERY REQUIRED ITEM. AS SUCH THE CONTRACTOR SHALL INCLUDE AS A PART OF HIS BID ALL WORK, MATERIALS, LABOR, EQUIPMENT, TOOLS, INSURANCE, TAXES, SERVICES, APPURTANCES, ETC. TO MAKE A COMPLETE OPERATIONAL SYSTEM. CONTRACTOR SHALL ASSUME FULL RESPONSIBILITY FOR ALL OBLIGATIONS ASSOCIATED WITH COMPLETION OF MECHANICAL WORK AS PROVIDED BY THE CONTRACT DOCUMENTS.

O.) CHANGES. CONTRACTOR SHALL NOT MAKE ANY CHANGE TO OR DEVIATE FROM THE CONTRACT DOCUMENTS WITHOUT WRITTEN APPROVAL FROM THE ARCHITECT/ENGINEER. THE ARCHITECT/ENGINEER WILL NOT BE RESPONSIBLE OR LIABLE FOR ANY CHANGES MADE WITHOUT THE ENGINEER'S KNOWLEDGE AND APPROVAL.

P.) QUESTIONS. ANY QUESTIONS THAT ARISE IN THE FIELD OR UPON REVIEW OF THE CONTRACT DRAWINGS THE CONTRACTOR SHALL SUBMIT THE QUESTION IN WRITING TO THE ARCHITECT/ENGINEER FOR CLARIFICATION. A PHONE CALL IS PERMISSIBLE BUT MUST BE FOLLOWED BY WITH THE WRITTEN SUBMISSION. REFER TO CONSTRUCTION MANAGER SCOPE OF WORK.

Q.) DOCUMENTS. CONTRACTOR SHALL READ AND BE FAMILIAR WITH THE REQUIREMENTS WITHIN ALL DRAWINGS AND SPECIFICATIONS. HE SHALL EXAMINE THE ARCHITECTURAL, STRUCTURAL, AQUATIC, MECHANICAL AND ELECTRICAL DRAWINGS AND SPECIFICATIONS TO FAMILIARIZE HIMSELF WITH THE TYPE OF CONSTRUCTION, MATERIALS, AND EQUIPMENT TO BE USED FOR ALL WORK AND HOW IT WILL AFFECT THE INSTALLATION OF HIS CONTRACT. BY THE ACT OF SUBMITTING A BID, THE CONTRACTOR WILL BE DEEMED TO HAVE MADE SUCH EXAMINATION, TO HAVE ACCEPTED SUCH CONDITIONS, TO HAVE MADE ALLOWANCE THEREFOR, AND INCLUDED ALL COSTS IN HIS PROPOSAL. FAILURE TO DETERMINE EXISTING CONDITIONS WILL NOT BE CONSIDERED A BASIS FOR THE GRANTING OF ADDITIONAL COMPENSATION.

R.) COORDINATION. COORDINATE WORK WITH THAT OF OTHER TRADES SO THAT THE VARIOUS COMPONENTS OF THE SYSTEMS WILL BE INSTALLED AT THE PROPER TIME, WILL FIT THE AVAILABLE SPACE, AND WILL ALLOW PROPER SERVICE ACCESS TO THOSE ITEMS REQUIRING MAINTENANCE. COMPONENTS WHICH ARE INSTALLED WITHOUT REGARD TO THE ABOVE SHALL BE RELOCATED AT NO ADDITIONAL COST TO THE OWNER.

GENERAL NOTES

S.) ROOF CURBS. SOME ROOF AREAS ARE SLOPED. COORDINATE CURB FABRICATION AND INSTALLATION WITH ROOF.

T.) DIMENSIONS. FIGURED DIMENSIONS SHALL BE TAKEN IN PREFERENCE TO SCALE DIMENSIONS. CONTRACTOR SHALL TAKE HIS OWN MEASUREMENTS AT THE BUILDING, AS VARIATIONS MAY OCCUR. CONTRACTOR WILL BE HELD RESPONSIBLE FOR ERRORS THAT COULD OF HAVE BEEN AVOIDED BY PROPER CHECKING AND INSPECTION.

U.) TRIM. PROVIDE MATERIALS WITH TRIM THAT WILL PROPERLY FIT THE TYPES OF CEILING, WALL OR FLOOR FINISHES ACTUALLY INSTALLED. MODEL NUMBERS LISTED IN THE SPECIFICATION OR SHOWN ON THE DRAWINGS ARE NOT INTENDED TO DESIGNATE THE REQUIRED TRIM.

V.) CEILINGS. CONTRACTOR SHALL COORDINATE GRILLE/DIFFUSER TYPES WITH REFLECTED CEILING PLAN. CONTRACTOR SHALL ALSO PROVIDE PLASTER FRAMES FOR GYP BOARD INSTALLATIONS AND COORDINATE T-BAR GRILLES WITH T-BAR SPECIFICATION.

W.) SUBSTITUTIONS. CONTRACTOR'S BIDS SHALL BE BASED ON THE MATERIAL MENTIONED OR SPECIFIED, AND ANY PROPOSALS FOR A SUBSTITUTION SHALL BE MADE IN WRITING TO THE ARCHITECT/ ENGINEER ALLOWING ADEQUATE TIME FOR APPROPRIATE ACTION. THE PRODUCTS OF OTHER MANUFACTURERS MAY BE ACCEPTED, IF IN THE OPINION OF THE ARCHITECT/ENGINEER, THE SUBSTITUTE MATERIAL IS OF A QUALITY AS GOOD OR BETTER THAN THE MATERIAL SPECIFIED, AND WILL SERVE WITH EQUAL EFFICIENCY AND DEPENDABILITY, THE PURPOSE FOR WHICH THE ITEMS SPECIFIED WERE INTENDED. THE BURDEN OF PROOF OF EQUALITY IS UPON THE PROPOSER.

X.) SHOP DRAWINGS. SHOP DRAWINGS AND CATALOG DATA ON ALL MAJOR ITEMS OF EQUIPMENT AND APPARATUS, AND SUCH OTHER ILLUSTRATIVE MATERIALS AS MAY BE CONSIDERED NECESSARY BY THE ARCHITECT/ENGINEER SHALL BE SUBMITTED BY THE CONTRACTOR IN ADEQUATE TIME TO PREVENT DELAY AND CHANGES DURING CONSTRUCTION. BEFORE SUBMITTING SHOP DRAWINGS AND MATERIAL LISTS, VERIFY THAT EQUIPMENT SUBMITTED IS MUTUALLY COMPATIBLE AND SUITABLE FOR THE INTENDED USE AND WILL FIT THE AVAILABLE SPACE AND ALLOW AMPLE ROOM FOR MAINTENANCE. THE ENGINEER'S CHECKING AND SUBSEQUENT APPROVAL OF SUCH SHOP DRAWINGS WILL NOT RELIEVE THE CONTRACTOR FROM RESPONSIBILITY FOR ERRORS IN DIMENSIONS, DETAILS, SIZE OF MEMBERS, QUANTITIES, OMISSIONS OF COMPONENTS OR FITTINGS; COORDINATION OF ELECTRICAL REQUIREMENTS; OR FOR COORDINATING ITEMS WITH ACTUAL BUILDING CONDITIONS. PROCEED WITH THE PROCUREMENT AND INSTALLATION OF EQUIPMENT ONLY AFTER RECEIVING APPROVED SHOP DRAWINGS RELATIVE TO EACH ITEM. CATALOG DATA SHALL BE PROPERLY BOUND, IDENTIFIED, INDEXED AND TABBED. EACH ITEM OR MODEL NUMBER SHALL BE CLEARLY MARKED AND ACCESSORIES INDICATED. LABEL THE CATALOG DATA WITH THE EQUIPMENT IDENTIFICATION ACRONYM OR NUMBER AS USED ON THE DRAWINGS AND INCLUDE PERFORMANCE CURVES, CAPACITIES, SIZES, MATERIALS, FINISHES, WIRING DIAGRAMS AND DEVIATIONS FROM SPECIFIED EQUIPMENT OR MATERIALS. MARK OUT INAPPLICABLE ITEMS. SHOP DRAWINGS WILL BE RETURNED WITHOUT REVIEW IF THE ABOVE REQUIREMENTS ARE NOT MET.

Y.) PROTECTION. STORE AND PROTECT FROM DAMAGE EQUIPMENT AND MATERIALS DELIVERED TO JOB SITE. COVER WITH WATERPROOF, TEAR RESISTANT, HEAVY TARP OR POLYETHYLENE PLASTIC AS REQUIRED TO PROTECT FROM PLASTER, DIRT, PAINT, WATER OR PHYSICAL DAMAGE. EQUIPMENT AND MATERIAL THAT HAS DAMAGED BY CONSTRUCTION ACTIVITIES WILL BE REJECTED AND THE CONTRACTOR IS OBLIGATED TO FURNISH NEW EQUIPMENT AND MATERIAL OF A LIKE KIND. PLUG OR CAP OPEN ENDS OF DUCTWORK AND PIPING SYSTEMS WHILE STORED AND INSTALLED DURING CONSTRUCTION WHEN NOT IN USE TO PREVENT THE ENTRANCE OF DEBRIS INTO THE SYSTEMS. KEEP THE MANUFACTURER-PROVIDED PROTECTIVE COVERINGS ON FLOOR DRAINS, FLOOR SINKS AND TRENCH DRAINS DURING CONSTRUCTION. REMOVE COVERINGS AT THE TERMINATION OF THE WORK AND POLISH EXPOSED SURFACES.

Z.) LICENSES/CODES. ALL PRODUCTS AND TYPES OF CONSTRUCTION SHALL MEET OR EXCEED THE LATEST EDITION OF APPLICABLE STANDARDS OF MANUFACTURER, TESTING, PERFORMANCE AND INSTALLATION. WORK PERFORMED UNDER THIS CONTRACT SHALL, AT A MINIMUM, BE IN CONFORMANCE WITH APPLICABLE NATIONAL, STATE AND LOCAL CODES HAVE JURISDICTION. EQUIPMENT FURNISHED AND ASSOCIATED INSTALLATION WORK PERFORMED UNDER THIS CONTRACT SHALL BE IN STRICT COMPLIANCE WITH CURRENT APPLICABLE CODES ADOPTED BY THE LOCAL AHJ INCLUDING ANY AMENDMENTS AND STANDARDS AS SET FORTH BY THE NATIONAL FIRE PROTECTION ASSOCIATION (NFPA), UNDERWRITERS LABORATORIES (UL), OCCUPATIONAL SAFETY AND HEALTH ADMINISTRATION (OSHA), AMERICAN SOCIETY OF MECHANICAL ENGINEERS (ASME), AMERICAN SOCIETY OF HEATING, REFRIGERATION AND AIR CONDITIONING ENGINEERS (ASHRAE), AMERICAN NATIONAL STANDARDS INSTITUTE (ANSI), AMERICAN SOCIETY OF TESTING MATERIALS (ASTM) AND OTHER NATIONAL STANDARDS AND CODES WHERE APPLICABLE. WHERE THE CONTRACT DOCUMENTS EXCEEDS THE REQUIREMENTS OF THE REFERENCED CODES, STANDARDS, ETC., THE CONTRACT DOCUMENTS SHALL TAKE PRECEDENCE. WHERE REQUIRED, OBTAIN, PAY FOR AND FURNISH CERTIFICATES OF INSPECTION TO THE OWNER. THE CONTRACTOR WILL BE HELD RESPONSIBLE FOR ANY VIOLATION OF THE LAW. MAINTAIN NECESSARY SIGNAL LIGHTS AND GUARDS FOR THE SAFETY OF THE PUBLIC. THE WORK SHALL COMPLY WITH THE EDITION OF THE APPLICABLE STANDARDS, REGULATIONS AND CODES CURRENTLY IN FORCE OF ALL STATE AND LOCATION AUTHORITIES HAVING JURISDICTION. WHERE QUANTITIES, SIZES, OR OTHER REQUIREMENTS INDICATED ON THE DRAWINGS OR HEREIN SPECIFIED ARE IN EXCESS OF THE STANDARD OR CODE REQUIREMENTS, THE SPECIFICATIONS AND/OR DRAWINGS SHALL GOVERN. IN THE ABSENCE OF OTHER APPLICABLE LOCAL CODES, ACCEPTABLE TO THE ARCHITECT/ENGINEER, AND UNIFORM PLUMBING AND MECHANICAL CODES SHALL APPLY TO THIS WORK.

bgr Consulting Engineers
Ph: 816.842.2800
Fx: 816.842.4884
CERTIFICATE OF AUTHORITY # 2006007202

PGAV ARCHITECTS
PECKHAM GUYTON ALBERS & VIETS, INC.
1900 W.47th Place, #300, Westwood, KS 66205
(913) 362-6500 www.PGAV.COM

Copyright ©2015

STATE OF MISSOURI — DOMINICK V. RUCERETO — NUMBER E-2001004656 — 7/3/19 — REGISTERED PROFESSIONAL ENGINEER

THE SEAL AND SIGNATURE APPLY ONLY TO THE DOCUMENT TO WHICH THEY ARE AFFIXED, AND EXPRESSLY DISCLAIM ANY RESPONSIBILITY FOR ALL OTHER PLANS, SPECIFICATIONS, ESTIMATES, REPORTS, OR OTHER DOCUMENTS OR INSTRUMENTS RELATING TO OR INTENDED TO BE USED FOR ANY PART OR PARTS OF THE ARCHITECTURAL OR ENGINEERING PROJECT.

\# DATE DESCRIPTION

USKC EARLY CHILDHOOD EXHIBITS

SCIENCE CITY @ UNION STATION
30 W. PERHSING RD
KANSAS CITY, MO 64108

CONSTRUCTION DOCUMENTS

Original Size: 1 1/2" Drawing may have been reduced. 0" 1"

MECHANICAL SCHEDULES

DATE: 07/03/2019
DRAWN: DVR CHECKED: DVR
PGAV #: 53494-00 CLIENT #:
SHEET #: **M710**

6 5 4 3 2 1

DVR

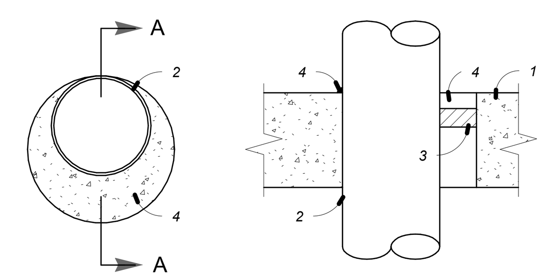

SECTION A-A

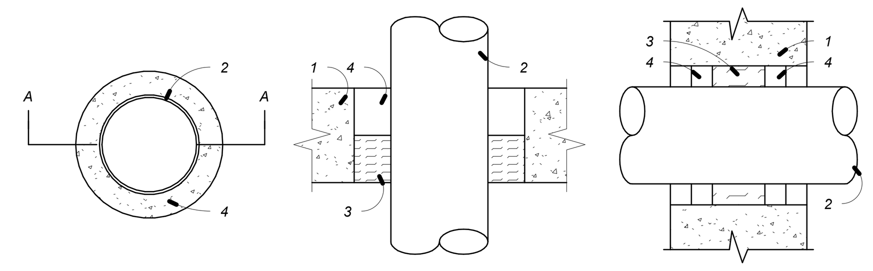

SECTION A-A
(FLOOR ASSEMBLY)

SECTION A-A
(WALL ASSEMBLY)

SYSTEM NO. 49
F RATINGS - 2 AND 3 HR.
(SEE ITEM 2A) T RATING - O HR.

1.) FLOOR OR WALL ASSEMBLY - MINIMUM 4 1/2" THICK LIGHTWEIGHT OR NORMAL WEIGHT (100-150 PCF) CONCRETE. WALL ASSEMBLY MAY ALSO BE CONSTRUCTED OF ANY UL CLASSIFIED CONCRETE BLOCKS. MAXIMUM DIAMETER OF CIRCULAR THROUGH OPENING IS 22 1/2".
SEE CONCRETE BLOCK (CAZT) CATEGORY IN FIRE RESISTANCE DIRECTORY FOR NAMES OF MANUFACTURERS.

1A.) STEEL SLEEVE - (OPTIONAL, NOT SHOWN) - NOMINAL 12" DIAMETER (OR SMALLER) SCHEDULE 40 (OR HEAVIER) STEEL PIPE SLEEVE CAST INTO CONCRETE FLOOR OR WALL. SLEEVE TO BE FLUSH WITH OR PROJECT MAX 2" FROM TOP SURFACE OF FLOOR OR FROM BOTH SURFACES OF WALL.

2.) PIPE OR CONDUIT - NOMINAL 20" DIAMETER (OR SMALLER) SCHEDULE 10S (OR HEAVIER) STEEL PIPE, NOMINAL 6" DIAMETER (OR SMALLER) RIGID STEEL CONDUIT, NOMINAL 6" DIAMETER (OR SMALLER) TYPE L (OR HEAVIER) COPPER TUBE, NOMINAL 4" DIAMETER. (OR SMALLER) CAST IRON PIPE OR NOMINAL. 4" DIAMETER. (OR SMALLER) STEEL EMT. MAXIMUM ONE PIPE OR CONDUIT PER THROUGH OPENING. MAXIMUM ANNULAR SPACE BETWEEN PIPE OR CONDUIT AND EDGE OF
THROUGH OPENING IS ZERO IN (POINT CONTACT). PIPE OR CONDUIT TO BE RIGIDLY SUPPORTED ON BOTH SIDES OF FLOOR OR WALL ASSEMBLY.

2A.) STEEL VENT DUCT - (NOT SHOWN) - AS AN ALTERNATE TO THE PIPE OR CONDUIT, NOMINAL 4" DIAMETER (OR SMALLER) NO. 28 GAUGE (OR HEAVIER) GALVANIZED STEEL VENT DUCT MAY BE USED IN THROUGH OPENINGS OF FLOOR ASSEMBLIES PROVIDED MAXIMUM ANNULAR SPACE DOES NOT EXCEED 7/8". WHEN STEEL VENT DUCT IS USED, F RATING IS 2 HRS.

3.) PACKING MATERIAL - POLYETHYLENE BACKER ROD OR NOMINAL 1" THICKNESS OF TIGHTLY- PACKED CERAMIC (ALUMINA SILICA) FIBER BLANKET, MINERAL-WOOL BATT OF GLASS FIBER INSULATION MATERIAL USED AS A PERMANENT FORM. PACKING MATERIAL TO BE RECESSED FROM TOP SURFACE OF FLOOR OR FROM BOTH SURFACES OF WALL AS REQUIRED TO ACCOMMODATE THE REQUIRED THICKNESS OF CAULK FILL MATERIAL (ITEM 4). AS AN ALTERNATE WHEN MAXIMUM PIPE SIZE IS 10" DIAMETER AND WHEN MAXIMUM ANNULAR SPACE IS 1" OR LESS, A MINIMUM 1" THICKNESS OF TIGHTLY-PACKED CERAMIC FIBER BLANKET OR MINERAL-WOOL BATT PACKING MATERIAL MAY BE RECESSED MINIMUM 1/2" FROM BOTTOM SURFACE OF FLOOR OR FROM EITHER SIDE OF WALL.

4.) FILL, VOID OR CAVITY MATERIALS* -CAULK- APPLIED TO FILL THE ANNULAR SPACE TO THE MINIMUM THICKNESS SHOWN IN THE FOLLOWING TABLE:

MAXIMUM PIPE DIAMETER. (IN.)	MAXIMUM ANNULAR SPACE (IN.)	PACKING MATERIAL TYPE (a)	MINIMUM CAULK THICKNESS (IN.)
10	1	BR, CF, GF or MW	1/2 (b)
10	1	CF or MW	1/2 (C) 1
20	2 /2	BR, CF, GF or MW	(b)

(a.) BR = POLYETHYLENE BACKER ROD. CF = CERAMIC FIBER BLANKET. GF = GLASS FIBER INSULATION. MW = MINERAL-WOOL BATT.
(b.) CAULK INSTALLED FLUSH WITH TOP SURFACE OF FLOOR OR BOTH SURFACE OF WALL.
(c.) CAULK INSTALLED FLUSH WITH BOTTOM SURFACE OF FLOOR OR ONE SURFACE OF WALL.
* BEARING THE UL CLASSIFICATION MARKING

SYSTEM NO. CAJ1012
(FORMERLY SYSTEM NO. 129)
F RATINGS - 1 HR. T RATING - O HR.

1.) FLOOR OR WALL ASSEMBLY - MINIMUM 5" THICK REINFORCED NORMAL WEIGHT (100 - 150 PCF) CONCRETE. WALL MAY ALSO BE CONSTRUCTED OF ANY UL CLASSIFIED CONCRETE BLOCKS*. MAXIMUM DIAMETER OF OPENING IS 6".
SEE CONCRETE BLOCKS (CAZT) CATEGORY IN THE FIRE RESISTANCE DIRECTORY FOR NAMES OF MANUFACTURERS.

2.) THROUGH PENETRANTS - ONE METALLIC PIPE OR CONDUIT TO BE CENTERED WITHIN THE FIRESTOP SYSTEM. A NOMINAL ANNULAR SPACE OF 3/4" IS REQUIRED WITHIN THE FIRESTOP SYSTEM. PIPE OR CONDUIT TO BE RIGIDLY SUPPORTED ON BOTH SIDES OF FLOOR OR WALL ASSEMBLY. THE FOLLOWING TYPES AND SIZES OF METALLIC PIPES OR CONDUITS MAY BE USED:
A. STEEL PIPE - NOMINAL 4" DIAMETER (OR SMALLER) SCHEDULE 5 (OR HEAVIER) STEEL PIPE.
B. CONDUIT - NOMINAL 4" DIAMETER (OR SMALLER) ELECTRICAL METALLIC TUBING OR STEEL CONDUIT.

3.) PACKING MATERIAL - MINIMUM 3" THICKNESS OF MINIMUM 4.4 PCF MINERAL WOOL BATT INSULATION FIRMLY PACKED INTO OPENING AS A PERMANENT FORM. PACKING MATERIAL TO BE RECESSED FROM TOP SURFACE OF FLOOR AS REQUIRED TO ACCOMMODATE THE REQUIRED THICKNESS OF FILL MATERIAL. PACKING MATERIAL TO BE CENTERED IN WALL'S MID-DEPTH AND RECESSED TO ALLOW FOR INSTALLATION OF FILL MATERIAL.

4.) FILL, VOID OR CAVITY MATERIAL* - SEALANT OR FOAM - MINIMUM 1/2" THICKNESS OF FILL MATERIAL APPLIED WITHIN ANNULUS, FLUSH WITH TOP SURFACE OF FLOOR. IN WALL, FILL MATERIAL TO BE APPLIED ON EACH SIDE OF PACKING MATERIAL. FOAMED SILICONE TO BE INSTALLED AS DESCRIBED IN THE MANUFACTURER'S APPLICATION INSTRUCTIONS AT A DENSITY OF 14 PCF MINIMUM TO 21 PCF MAXIMUM. THE THICKNESS OF FILL MATERIAL IS DEPENDENT UPON THE TYPE OF FILL MATERIAL AS SHOWN IN THE TABLE BELOW.

FILL MATERIAL IDENTIFICATION	MINIMUM THICK OF FILL MATERIAL, (IN.)
TYPE FS FOAM TYPE FS SEALANT OR FS SEALANT SL	1 1/2

DOW CORNING CORP. - TYPES FS SEALANT, FS SEALANT SL (FLOOR ONLY) OR FS FOAM
* BEARING THE UL CLASSIFICATION MARKING.

1 FIRE STOPPING DETAIL
SCALE: NONE

NOTE:
BRANCH DUCT RUNOUT TO DIFFUSER SHOULD BE THE SAME SIZE AS THE DIFFUSER NECK UNLESS OTHERWISE INDICATED ON PLAN.

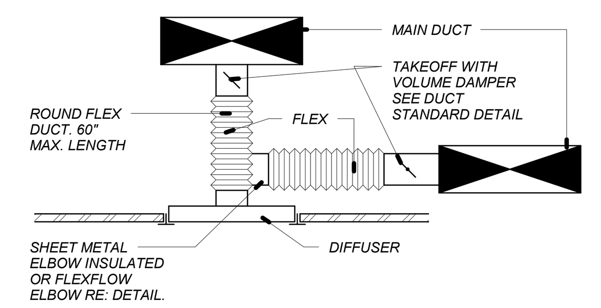

2 DIFFUSER DETAIL
SCALE: NONE

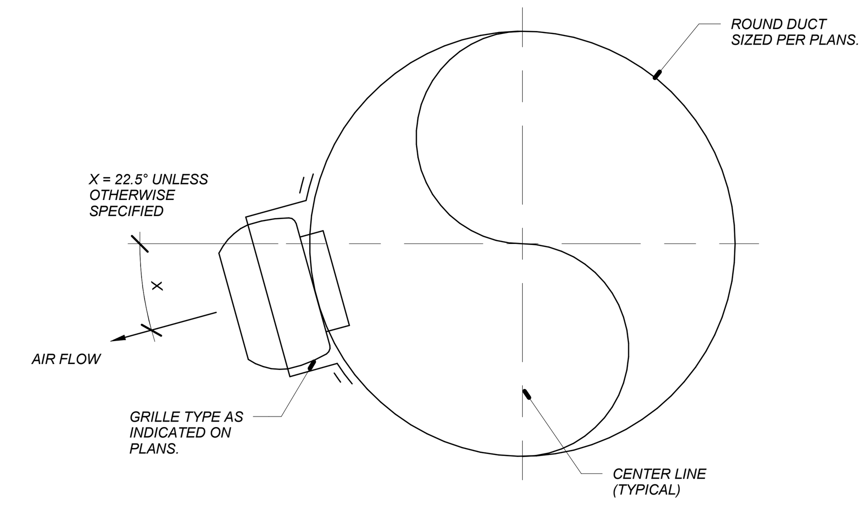

NOTE:
CONTRACTOR SHALL PROVIDE FABRICATION DETAIL OF GRILLE WITH SHOP DRAWINGS. FAILURE TO DO SO WILL NOT BE CON- SIDERED A BASIS FOR THE GRANTING OF ADDITIONAL COMPENSATION TO RELOCATE GRILLES AND PROVIDE NEW MAIN DUCTWORK IF ACCEPTABLE TO ARCHITECT/ENGINEER.

3 SUPPLY DIFFUSER DETAIL
SCALE: NONE

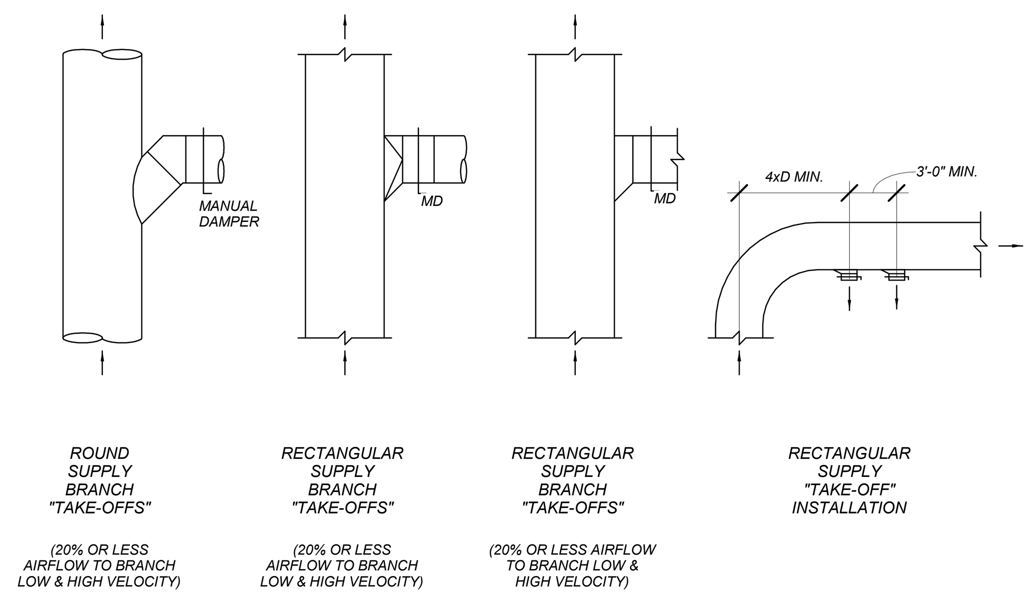

4 DUCT STANDARDS DETAIL
SCALE: NONE

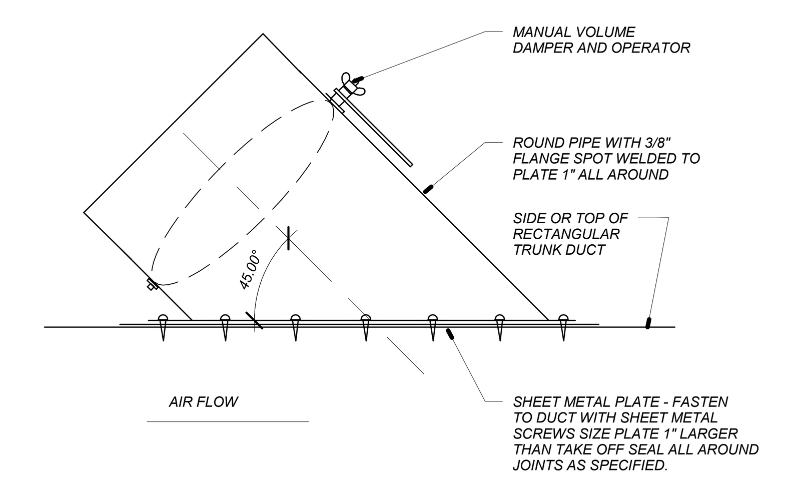

5 MEDIUM PRESSURE TAKEOFF DETAIL
SCALE: NONE

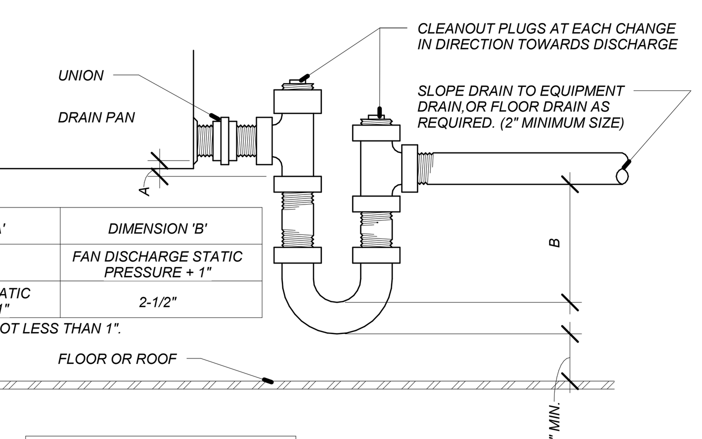

COIL TYPE	DIMENSION 'A'	DIMENSION 'B'
BLOW THRU	1"	FAN DISCHARGE STATIC PRESSURE + 1"
DRAW THRU	FAN SUCTION STATIC PRESSURE + 1"	2-1/2"

NOTE: MINIMUM 'A' OR 'B' DIMENSION SHALL BE NOT LESS THAN 1".

PROVIDE CONDENSATE OVERFLOW SWITCH WHERE SPECIFIED.

6 HVAC CONDENSATE TRAP DRAIN DETAIL
SCALE: NONE

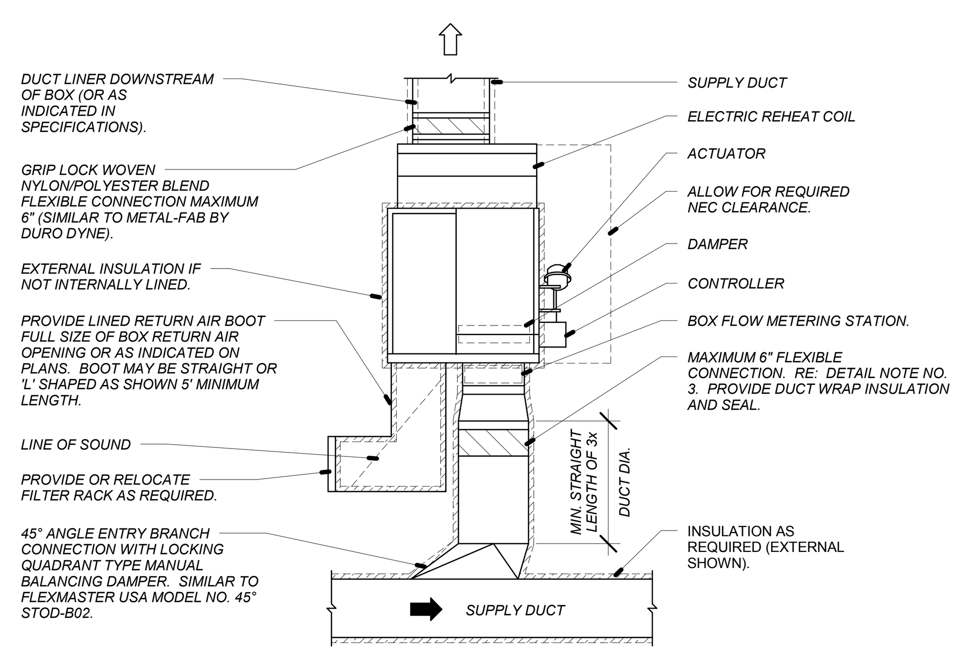

NOTES:
1.) SUPPORT AIR TERMINAL UNIT, BOTH ENDS WITH MINIMUM 2" WIDE GALVANIZED 22G. HANGER STRAPS. SUPPORT UNIT WITH SPRING VIBRATION ISOLATORS WITH 0.5 STATIC DEFLECTION IF INTERNAL FAN SPRING ISOLATION IS NOT PROVIDED. LOCATE SUPPORTS AROUND UNIT TO MAINTAIN CLEARANCE FOR ACCESS TO UNIT COMPONENTS AND ACCESS DOORS.

2.) INSTALL BOX NO MORE THAN 3 FEET ABOVE CEILING TO ENABLE ACCESS FOR MAINTENANCE.

3.) FLEXIBLE CONNECTION SHALL BE ATCO MODEL UPC# 017 OR DURO-DYNE INSULFLEX.

7 FAN POWERED BOX DETAIL
SCALE: NONE

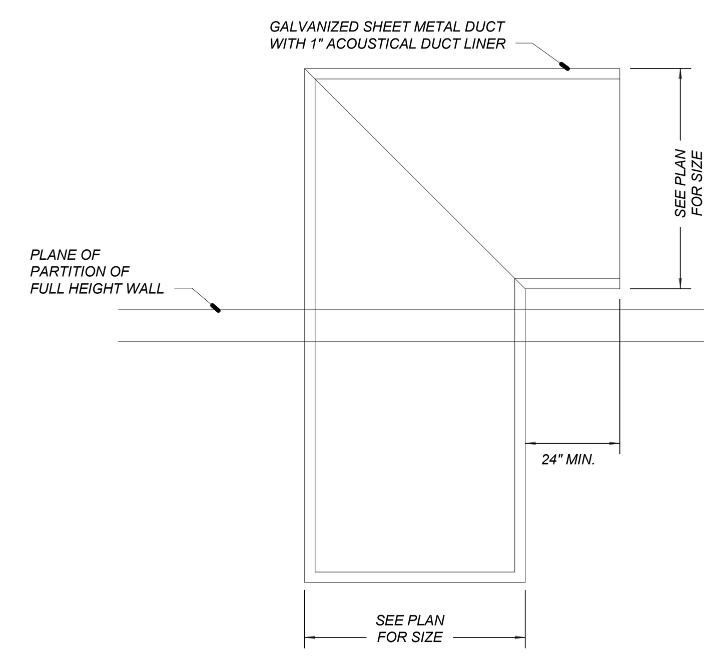

8 RETURN AIR TRANSFER BOOT DETAIL
SCALE: NO SCALE

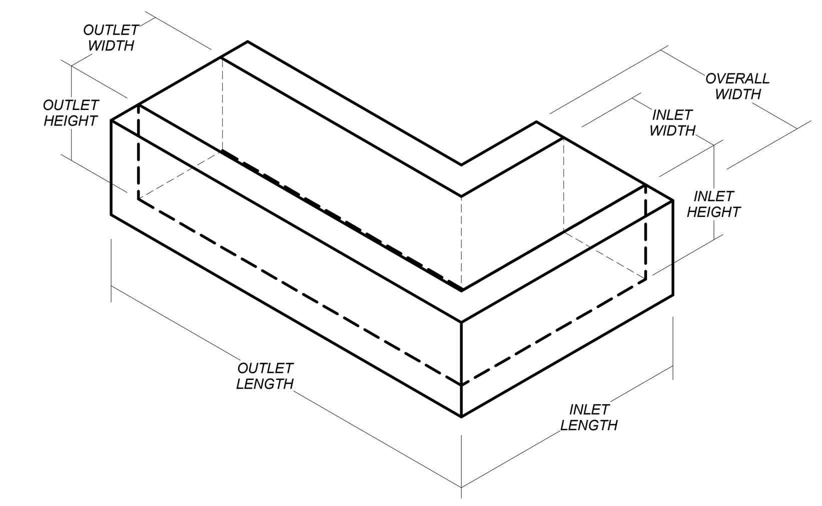

9 DUCT SILENCER ELBOW
SCALE: NO SCALE

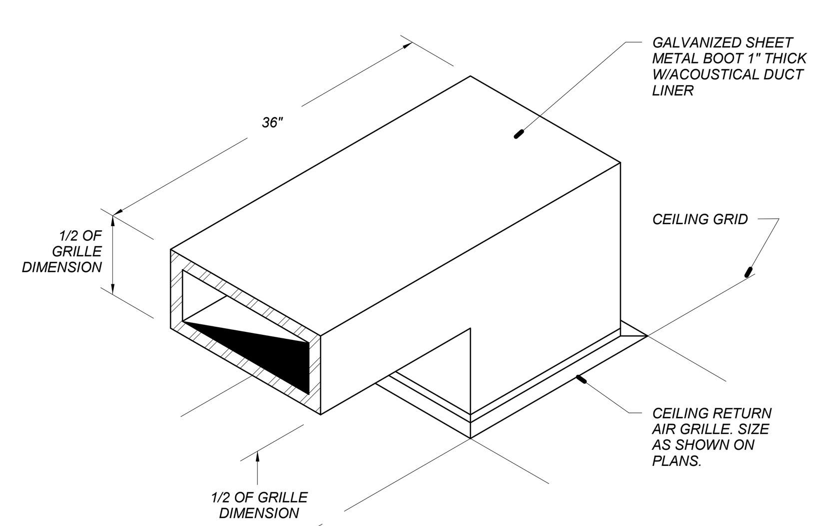

10 RETURN AIR BOOT DETAIL
SCALE: NONE

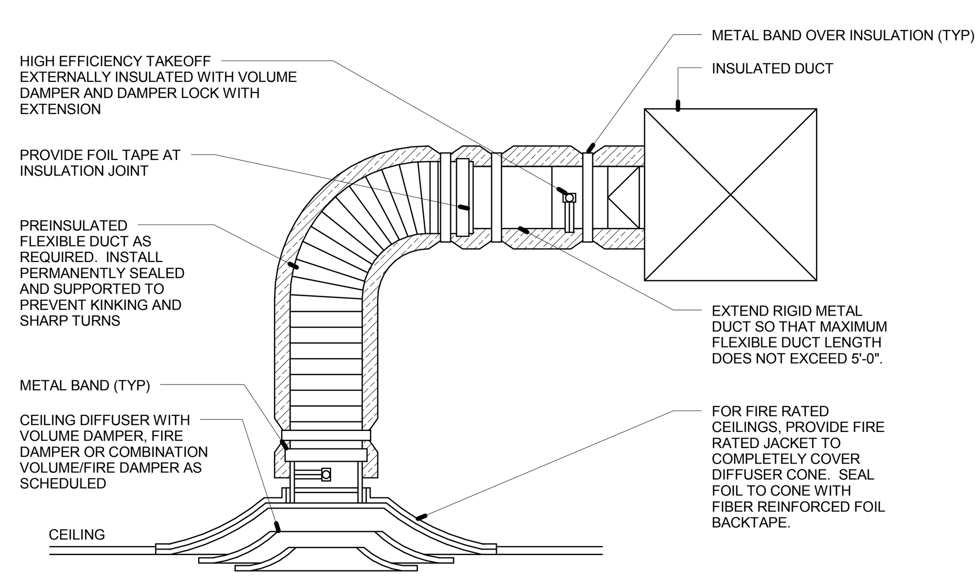

11 CEILING DIFFUSER DETAIL
SCALE: NONE

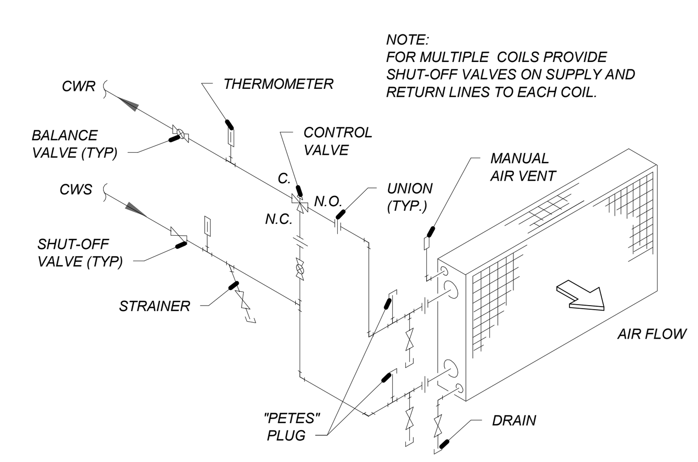

12 CHILLED WATER COIL DETAIL
SCALE: NO SCALE

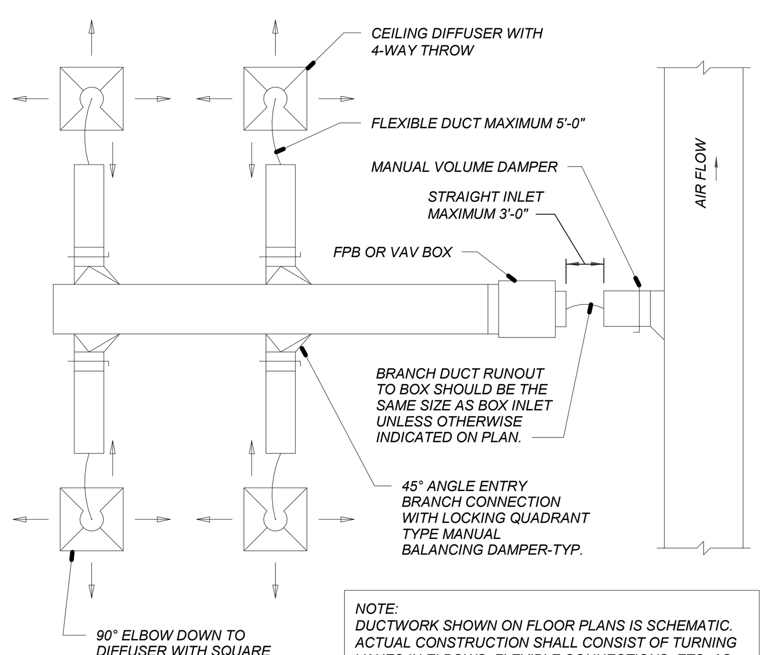

NOTE:
DUCTWORK SHOWN ON FLOOR PLANS IS SCHEMATIC. ACTUAL CONSTRUCTION SHALL CONSIST OF TURNING VANES IN ELBOWS, FLEXIBLE CONNECTIONS, ETC. AS ILLUSTRATED OR SPECIFIED.

13 TYPICAL DUCTWORK LAYOUT
SCALE: NO SCALE

PGAV ARCHITECTS
PECKHAM GUYTON ALBERS & VIETS, INC.
1900 W.47th Place, #300, Westwood, KS 66205
(913) 362-6500 www.PGAV.COM

Copyright ©2015

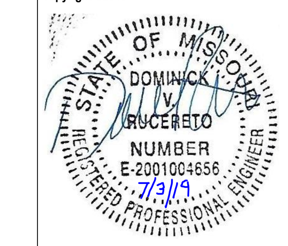

THE SEAL AND SIGNATURE APPLY ONLY TO THE DOCUMENT TO WHICH THEY ARE AFFIXED, AND EXPRESSLY DISCLAIM ANY RESPONSIBILITY FOR ALL OTHER PLANS, SPECIFICATIONS, ESTIMATES, REPORTS, OR OTHER DOCUMENTS OR INSTRUMENTS RELATING TO OR INTENDED TO BE USED FOR ANY PART OR PARTS OF THE ARCHITECTURAL OR ENGINEERING PROJECT.

DATE DESCRIPTION

USKC EARLY CHILDHOOD EXHIBITS

SCIENCE CITY @ UNION STATION
30 W. PERHSING RD
KANSAS CITY, MO 64108

CONSTRUCTION DOCUMENTS

Original Size: 1 1/2" Drawing may have been reduced.
0" 1"

MECHANICAL DETAILS

DATE: 07/03/2019
DRAWN: DVR CHECKED: DVR
PGAV #: 53494-00 CLIENT #
SHEET #: **M810**

bgr Consulting Engineers
Ph: 816.842.2800
Fx: 816.842.4884
CERTIFICATE OF AUTHORITY
2006007202

6/28/2019 10:33:40 AM C:\Users\Dominick\Documents\(v16) 17-xUnion Station-Mech_drucereto.rvt

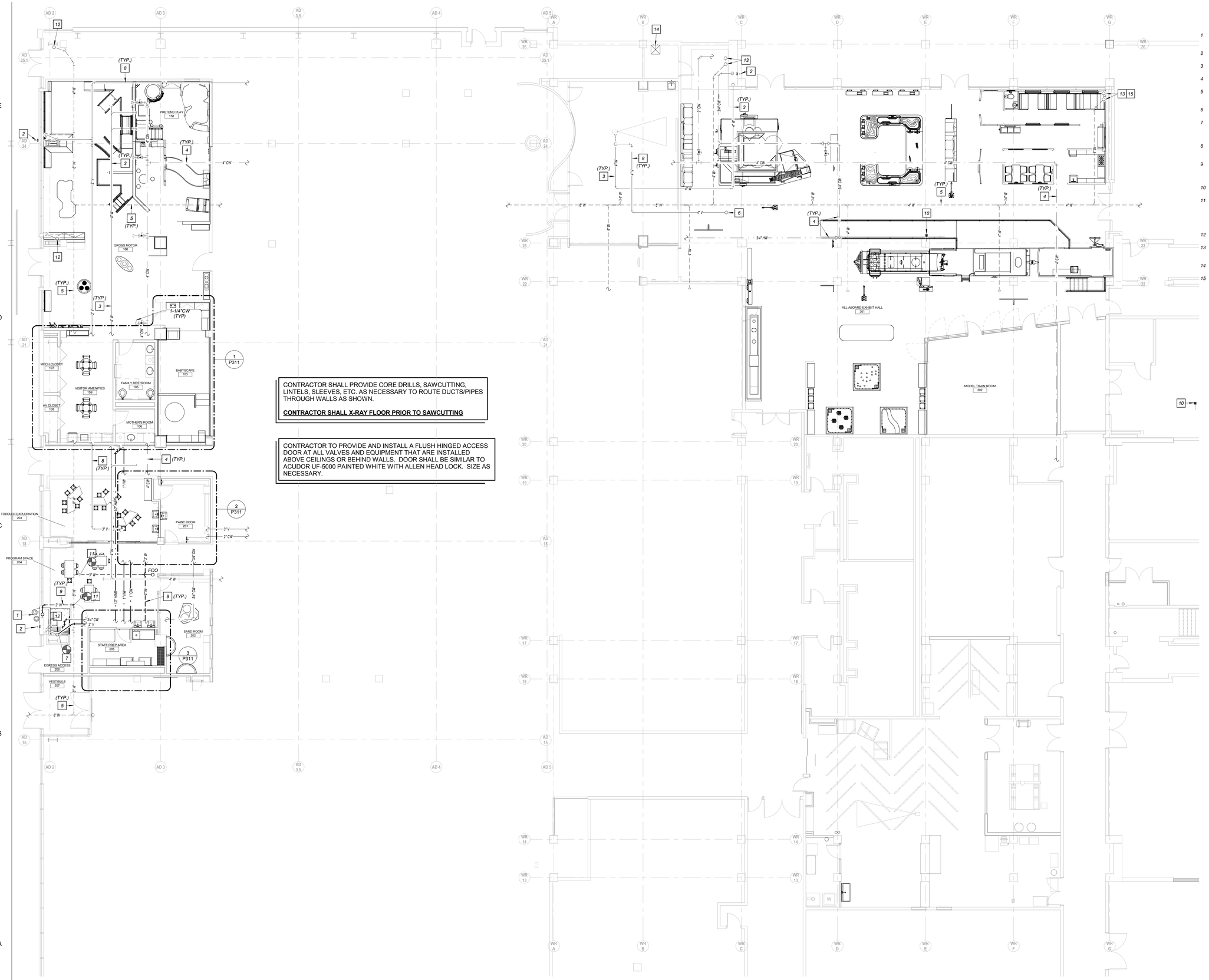

CONTRACTOR SHALL PROVIDE CORE DRILLS, SAWCUTTING, LINTELS, SLEEVES, ETC. AS NECESSARY TO ROUTE DUCTS/PIPES THROUGH WALLS AS SHOWN.

CONTRACTOR SHALL X-RAY FLOOR PRIOR TO SAWCUTTING

CONTRACTOR TO PROVIDE AND INSTALL A FLUSH HINGED ACCESS DOOR AT ALL VALVES AND EQUIPMENT THAT ARE INSTALLED ABOVE CEILINGS OR BEHIND WALLS. DOOR SHALL BE SIMILAR TO ACUDOR UF-5000 PAINTED WHITE WITH ALLEN HEAD LOCK. SIZE AS NECESSARY.

1 LEVEL 1 FLOOR PLAN - PLUMBING

SCALE: 1/8" = 1'-0"

FLOOR PLAN NOTES

1. EXISTING DRINKING FOUNTIAN TO REMAIN. PROVIDE NEW DRAIN PIPE CONNECTION AND ROUTE TO NEW MAIN AS INDICATED.
2. EXISTING WALL HYDRANT AND ALL ASSOCIATED PIPING TO REMAIN.
3. EXISTING OVERHEAD SANITARY SEWER PIPING TO REMAIN.
4. EXISTING DOMESTIC WATER PIPING TO REMAIN.
5. APPROXIMATE LOCATION OF THE EXISTING BELOW SLAB SANITARY SEWER PIPING TO REMAIN. FIELD VERIFY EXACT LOCATION.
6. EXISTING 4" VENT PIPE UP. FIELD VERIFY EXACT LOCATION.
7. CONNECT TO EXISTING VENT PIPE. FIELD VERFIY EXACT LOCATION OF CONNECTION PRIOR TO BEGINNING ANY WORK. NOTIFY ARCHITECT/ENGINEER IF PROBLEMS ARE FOUND.
8. EXISTING OVERHEAD VENT PIPE TO REMAIN. FIELD VERIFY EXACT LOCATION.
9. INSTALL PIPE BELOW EXISTING FLOOR. SAWCUT AND TRENCH AS REQUIRED. PATCH AND REPAIR FLOOR AS INSTRUCTED BY ARCHITECT.
10. EXISTING FLOOR DRAIN TO REMAIN. FIELD VERIFY EXACT LOCATION.
11. CONNECT TO EXISTING WASTE PIPE BELOW FLOOR. FIELD VERIFY EXACT LOCATION AND ELEVATION OF CONNECTION PRIOR TO BEGINNING ANY WORK. NOTIFY ARCHITECT/ENGINEER IF PROBLEMS ARE FOUND. SAWCUT FLOOR SLAB AND TRENCH AS NECESARY. REPAIR ALL SURFACES PER ARCHITECT'S INSTRUCTIONS.
12. EXISTING 3" VENT PIPE UP. FIELD VERIFY EXACT LOCATION.
13. EXISTING 4" VENT AND 4" SANITARY SEWER PIPES FROM ABOVE. FIELD VERIFY EXACT LOCATION.
14. APPROXIMATE LOCATION OF EXISTING JANITOR SINK TO REMAIN.
15. COORDINATE EXISTING PIPE RISER WITH EXHIBIT INSTALLER.

PGAV ARCHITECTS
PECKHAM GUYTON ALBERS & VIETS, INC.
1900 W.47th Place, #300, Westwood, KS 66205
(913) 362-6500 www.PGAV.COM

Copyright ©2015

STATE OF MISSOURI
DOMINICK J. RUCEBETO
NUMBER E-2001004656
7/3/19
REGISTERED PROFESSIONAL ENGINEER

THE SEAL AND SIGNATURE APPLY ONLY TO THE DOCUMENT TO WHICH THEY ARE AFFIXED AND EXPRESSLY DOES NOT ANY RESPONSIBILITY FOR ALL OTHER PLANS, SPECIFICATIONS, ESTIMATES, REPORTS, OR OTHER DOCUMENTS OR INSTRUMENTS RELATING TO OR INTENDED TO BE USED FOR ANY PART OR PARTS OF THE ARCHITECTURAL OR ENGINEERING PROJECT.

#	DATE	DESCRIPTION

USKC EARLY CHILDHOOD EXHIBITS

SCIENCE CITY @ UNION STATION
30 W. PERHSING RD
KANSAS CITY, MO 64108

CONSTRUCTION DOCUMENTS

Original Size: 1 1/2" Drawing may have been reduced.
0" 1"

PLUMBING PLAN

DATE: 07/03/2019
DRAWN: DVR
CHECKED: DVR
PGAV # 53494-00
CLIENT #
SHEET #
P310

bgr Consulting Engineers
Ph: 816.842.2800
Fx: 816.842.4884
CERTIFICATE OF AUTHORITY # 2006007202

6/28/2019 10:34:07 AM C:\Users\Dominick\Documents\(v16) 17-Union Station-Mech_drucereto.rvt

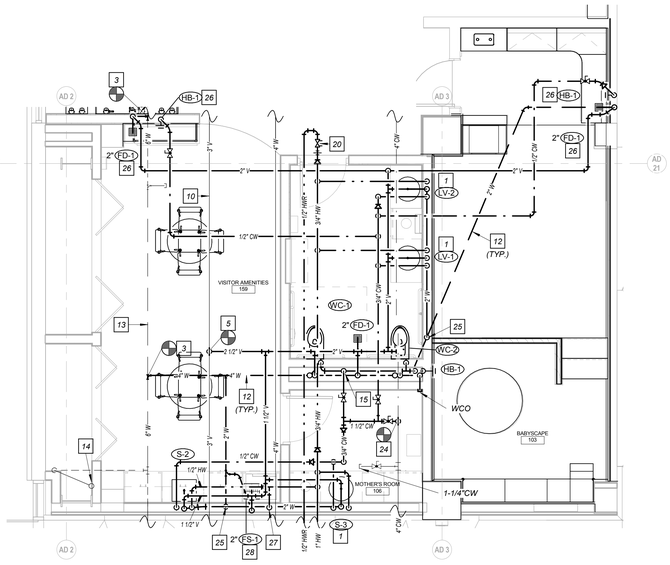

1 ENLARGED PLUMBING PLAN - TOILETS

SCALE: 1/4" = 1'-0"

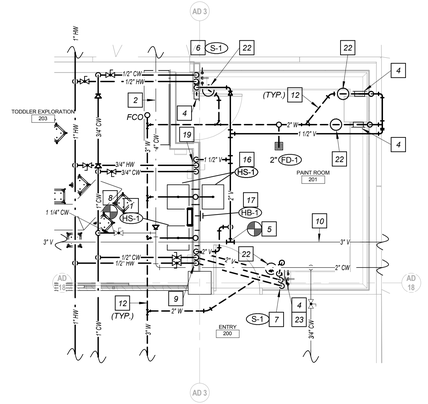

2 ENLARGED PLUMBING PLAN - MESSY ARTS

SCALE: 1/4" = 1'-0"

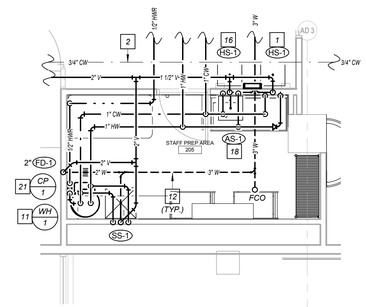

3 ENLARGED PLUMBING PLAN - CREATIVE CORNER

SCALE: 1/4" = 1'-0"

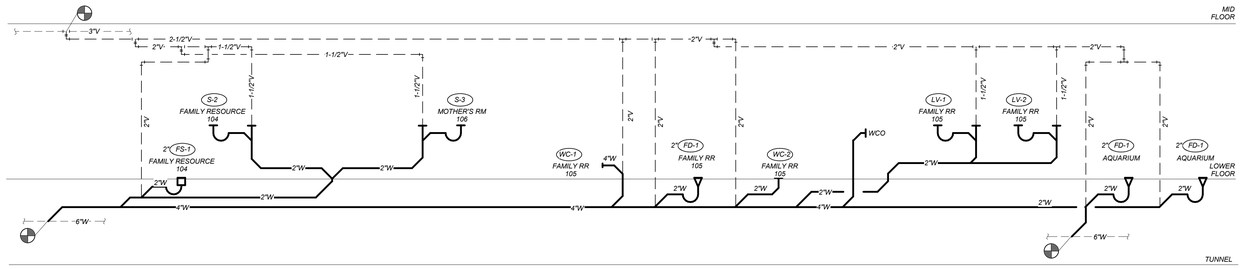

4 PLUMBING RISER--FAMILY RESTROOM

SCALE: NONE

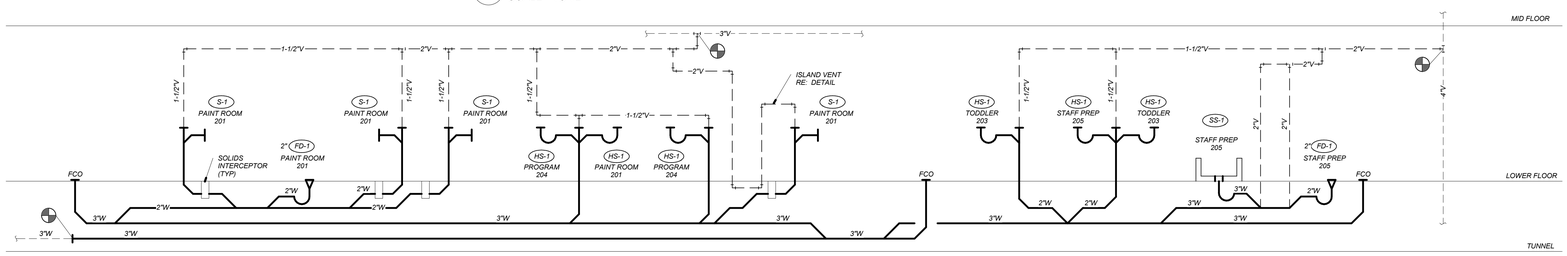

5 PLUMBING RISER--CREATIVE CORNER/MESSY ARTS

SCALE: NONE

FLOOR PLAN NOTES

1 *PROVIDE WITH THERMOSTATIC MIXING VALVE SIMILAR TO LEONARD 170A-LF-BRKT WITH ASSE 1070 CERTIFICATION. SET OUTLET FOR 90F. MOUNT VALVE TO WALL WITH BRACKET BELOW LAV. DO NOT HANG FROM FLEX HOSES.*

2 *EXISTING DOMESTIC WATER PIPING TO REMAIN. FIELD VERIFY EXACT LOCATION.*

3 *CONNECT TO EXISTING WASTE PIPE BELOW FLOOR. FIELD VERIFY EXACT LOCATION AND ELEVATION OF CONNECTION PRIOR TO BEGINNING ANY WORK. NOTIFY ARCHITECT/ENGINEER IF PROBLEMS ARE FOUND. SAWCUT FLOOR SLAB AND TRENCH AS NECESARY. REPAIR ALL SURFACES PER ARCHITECT'S INSTRUCTIONS.*

4 *MAKE WASTE/VENT PIPE CONNECTION TO PAINT TROUGH DRAIN AS NECESSARY. PROVIDE ALL NECESSARY FITTINGS. COORDINATE WITH EQUIPMENT PROVIDER. ROUTE THROUGH SOLIDS INTERCEPTOR IN FLOOR AS SHOWN.*

5 *CONNECT TO EXISTING VENT PIPE. FIELD VERFIY EXACT LOCATION OF CONNECTION PRIOR TO BEGINNING ANY WORK. NOTIFY ARCHITECT/ENGINEER IF PROBLEMS ARE FOUND.*

6 *ROUGH-IN HOT AND COLD WATER PIPES FOR CONNECTION TO PAINT TROUGH FAUCET. COORDINATE WITH EQUIPMENT INSTALLER. CONCEAL ALL PIPING WITHIN CASEWORK.*

7 *ROUGH-IN HOT AND COLD WATER PIPES FOR CONNECTION TO PAINT TROUGH FAUCET. COORDINATE WITH EQUIPMENT INSTALLER. ROUTE PIPE UP FROM BELOW FLOOR AS INDICATED. CONCEAL ALL PIPING WITHIN CASEWORK.*

8 *CONNECT TO EXISTING ON TAP OVERHEAD COLD WATER PIPE. FIELD VERIFY EXACT LOCATION AND ELEVATION OF CONNECTION PRIOR TO BEGINNING ANY WORK. NOTIFY ARCHITECT/ENGINEER IF PROBLEMS ARE FOUND.*

9 *ROUTE HOT AND COLD WATER DOWN WITHIN WALL TO BELOW FLOOR. EXTEND BELOW FLOOR TO FAUCET AS INDICATED. INSTALL UNDERFLOOR WATER PIPING PER DETAIL. SAWCUT AND TRENCH AS REQUIRED. PATCH AND REPAIR FLOOR AS INSTRUCTED BY ARCHITECT.*

10 *EXISTING VENT PIPE TO REMAIN. FIELD VERIFY EXACT LOCATION.*

11 *DOMESTIC WATER HEATER. RE: SCHEDULE. INSTALL PER DETAIL. MOUNT ON 4" CONCRETE HOUSEKEEPING PAD. ROUTE T&P RELIEF VALVE AND DRAIN VALVVE TO FLOOR DRAIN AND INDIRECT WASTE.*

12 *INSTALL PIPE BELOW EXISTING FLOOR. SAWCUT AND TRENCH AS REQUIRED. PATCH AND REPAIR FLOOR AS INSTRUCTED BY ARCHITECT.*

13 *APPROXIMATE LOCATION OF THE EXISTING BELOW SLAB SANITARY SEWER PIPING TO REMAIN. FIELD VERIFY EXACT LOCATION.*

14 *EXISTING 3" VENT PIPE UP. FIELD VERIFY EXACT LOCATION.*

15 *ROUTE 1-1/2" COLD WATER DOWN AND HORIZONTALLY THE FULL LENGTH OF CHASE AT FULL SIZE WITH NO REDUCTIONS. CONNECT TO ALL FIXTURES AS NECESSARY. REFER TO BRANCH FIXTURE SCHEDULE FOR SIZES. PROVIDE AND INSTALL AT LEAST 1 WATER HAMMER ARRESTORS. RE: WATER HAMMER ARRESTOR DETAIL.*

16 *CONNECT FIXTURES BACK TO BACK. PROVIDE WITH THERMOSTATIC MIXING VALVE SIMILAR TO LEONARD 170A-LF-BRKT WITH ASSE 1070 CERTIFICATION. SET OUTLET FOR 90F. MOUNT VALVE TO WALL WITH BRACKET BELOW LAV. DO NOT HANG FROM FLEX HOSES.*

17 *INSTALL HOSE BIBB BELOW HAND SINK.*

18 *CONNECT FIXTURES BACK TO BACK.*

19 *ROUTE 3/4"CW, 3/4" HW AND 1-1/2" VENT DOWN WTHIN WALL. ROUTE PIPES STACKED HORIZONTALLY WITHIN WALL BELOW WINDOW AND CONNECT TO HS-1's AND HB-1 AS REQUIRED. REFER TO BRANCH FIXTURE SCHEDULE FOR SIZES. PROVIDE AND INSTALL WATER HAMMER ARRESTORS. RE: WATER HAMMER ARRESTOR DETAIL.*

20 *LEAD FREE CALIBRATED BALANCE VALVE. BALANCE FOR 0.5 GPM.*

21 *HOT WATER RECIRCULATION PUMP. RE: SCHEDULE. INSTALL PER DETAIL. SUPPORT FROM WALL/FLOOR AS REQUIRED.*

22 *PROVIDE AND INSTALL A FLUSH FLOOR SOLIDS INTERCEPTOR FOR PAINT TROUGH DRAIN. INSTALL PER DETAIL IN EXISTING FLOOR. INTERCEPTOR TO BE SIMILAR TO JR SMITH 8710 POINT OF USE FLUSH FLOOR SOLIDS SEPARATOR WITH INTEGRAL TRAP (NO NEED FOR P-TRAP) AND 0.5 GALLON CAPACITY OR EQUAL.*

23 *PROVIDE AND INSTALL ISLAND VENT. RE: DETAIL.*

24 *PROVIDE NEW TAP ON EXISTING COLD WATER PIPE AND CONNECT. FIELD VERIFY EXACT LOCATION AND ELEVATION OF EXISTING PIPE PRIOR TO BEGINNING ANY WORK. PERFORM CONNECTION WITH HOT TAP. NOTIFY ARCHITECT/ENGINEER IF PROBLEMS ARE FOUND. PATCH AND REPAIR INSULATION AS REQUIRED.*

25 *ROUTE WASTE FROM SINKS/LAVS DOWN TO BELOW FLOOR SLAB AND CONNECT TO MAIN.*

26 *LOCATE WITH BASE OF FISHTANK. COORDINATE WITH EXHIBIT INSTALLER.*

27 *PROVIDE 3/4" HOT WATER CONNECTION TO DISHWASHER/SANITIZER. PROVIDE CONNECTION WITH SHUT-OFF VALVE, PRESSURE REDUCING VALVE AND WATER HAMMER ARRESTOR. COORDINATE WITH OWNER TO VERIFY QUALITY OF THE WATER SUPPLY TO ENSURE ALLOWABLE HARDNESS.*

28 *LOCATE FLOOR SINK TO SERVE DISHWASHER/SANITIZER DRAIN. SAWCUT FLOOR SLAB AS REQUIRED. PROVIDE FLOOR SINK WITH AIR GAP A MINIMUM OF 1.5 TIMES THE DRAIN HOSE SIZE.*

PGAV ARCHITECTS
PECKHAM GUYTON ALBERS & VIETS, INC.
1900 W.47th Place, #200, Westwood, KS 66205
(913) 362-6500 www.PGAV.COM
Copyright ©2015

STATE OF MISSOURI
DOMINICK J. DVR
RUCCELLO
NUMBER E-2001004656
7/3/19
REGISTERED PROFESSIONAL ENGINEER

THE SEAL AND SIGNATURE APPLY ONLY TO THE DOCUMENT TO WHICH THEY ARE AFFIXED. THE ENGINEER ASSUMES NO RESPONSIBILITY FOR ALL OTHER PLANS, SPECIFICATIONS, ESTIMATES, REPORTS, OR OTHER DOCUMENTS OR INSTRUMENTS RELATIVE TO OR DERIVED FROM THIS PROJECT EXCEPTING THE PARTS OF THE ARCHITECTURAL OR ENGINEERING PROJECT.

#	DATE	DESCRIPTION

USKC EARLY CHILDHOOD EXHIBITS

SCIENCE CITY @ UNION STATION
30 W. PERSHING RD
KANSAS CITY, MO 64108

CONSTRUCTION DOCUMENTS

Original Size: 1 1/2" Drawing may have been reduced.

ENLARGED PLUMBING PLANS

DATE:	07/03/2019
DRAWN: DVR	CHECKED: DVR
PGAV # 53494-00	CLIENT #
SHEET #	P311

bgr Consulting Engineers
PH: 816.842.2800
FX: 816.842.4884
CERTIFICATE OF AUTHORITY # 2006007202

6/28/2019 10:34:13 AM C:\Users\Dominick\Documents\V16\ 17 w\Union Station-Mech_druccello.rvt

DVR

PLUMBING FIXTURE SCHEDULE 1

MARK	MANUFACTURER	MODEL NO.	DESCRIPTION
WC-1	AMERICAN STANDARD	2257.001	WALL HUNG WATER CLOSET (ADA): WHITE VITREOUS CHINA, LOW CONSUMPTION SIPHON JET, ELONGATED WALL MOUNTED WATER CLOSET WITH SANAGLOSS CERAMIC GLAZE, 1-1/2" TOP SPUD INLET AND EXTRA HEAVY DUTY 500# WALL HANGER, CHURCH OPEN FRONT SEAT. MOUNT TOP OF RIM 17" A.F.F.
	TOTO	TET1LA32	1.28 GPF FLUSH VALVE. SELF GENERATING HYDRO POWER WITH BATTERY BACKUP, EXPOSED ECOPOWER SENSOR OPERATED FLUSHOMETER VALVES: PISTON VALVE, POSITIVE SEAL, SELF CLEANING DEBRIS SCREEN; FLUSHING SYSTEM TO MAINTAIN TRAP SEAL EVERY 24 HOURS WHEN NOT USED; TOP SPUD; NEUTRAL ROUGH-IN; CHROME PLATED FINISH; 3 YEAR WARRANTY; COMPLYING WITH ANSI/ASSE 1037.
WC-2	AMERICAN STANDARD	2282.001	FLOOR MOUNT BABY WATER CLOSET (ADA): WHITE VITREOUS CHINA, LOW CONSUMPTION SIPHON JET, ROUND FLOOR MOUNTED WATER CLOSET WITH SANAGLOSS CERAMIC GLAZE, 1-1/2" TOP SPUD INLET, CHURCH OPEN FRONT SEAT WITH 10" A.F.F. RIM.
	TOTO	TET1LA32	1.28 GPF FLUSH VALVE. SELF GENERATING HYDRO POWER WITH BATTERY BACKUP, EXPOSED ECOPOWER SENSOR OPERATED FLUSHOMETER VALVES: PISTON VALVE, POSITIVE SEAL, SELF CLEANING DEBRIS SCREEN; FLUSHING SYSTEM TO MAINTAIN TRAP SEAL EVERY 24 HOURS WHEN NOT USED; TOP SPUD; NEUTRAL ROUGH-IN; CHROME PLATED FINISH; 3 YEAR WARRANTY; COMPLYING WITH ANSI/ASSE 1037.
LV-1	AMERICAN STANDARD	OVALYN 0495.300	LAVATORY: LAVATORY: VITREOUS CHINA, 19-1/4" X 15-3/4" OVAL UNDERMOUNT LAVATORY, BACK OVERFLOW.
	TOTO	TEL5LG10	GOOSE NECK, AUTOMATIC INFRARED SENSOR OPERATED FAUCET WITH ECO POWER SELF GENERATING POWER SYSTEM, CHROME FINISH, ANTI-SCALD, THERMAL MIXING CHAMBER SINGLE SUPPLY OPENING, MAXIMUM DISCHARGE 0.17 GALLONS PER 10 SECOND CYCLE, VANDAL PROOF SPRAY HEAD. INSTALL TOTO TN78-10V510 THERMOSTATIC CONTROLLER/MIXING VALVE BELOW COUNTER AND SET FOR 105°F. PROVIDE PERFORATED GRID DRAIN WITH OFFSET AND 1-1/4" TAILPIECE SEMI-CAST BRASS P-TRAP WITH CLEANOUT, CHROME-PLATED RISERS WITH LOOSE KEY ANGLE STOPS. INSTALL P-TRAP PARALLEL AND ADJACENT TO WALL. INSULATE EXPOSED SUPPLIES AND DRAIN. COVER ALL INSULATION WITH PVC JACKET.
LV-2	AMERICAN STANDARD	OVALYN 0495.300	LAVATORY: LAVATORY: VITREOUS CHINA, 19-1/4" X 15-3/4" OVAL UNDERMOUNT LAVATORY, BACK OVERFLOW.
	TOTO	TEL5LG10	GOOSE NECK, AUTOMATIC INFRARED SENSOR OPERATED FAUCET WITH ECO POWER SELF GENERATING POWER SYSTEM, CHROME FINISH, ANTI-SCALD, THERMAL MIXING CHAMBER SINGLE SUPPLY OPENING, MAXIMUM DISCHARGE 0.17 GALLONS PER 10 SECOND CYCLE, VANDAL PROOF SPRAY HEAD. INSTALL TOTO TN78-10V510 THERMOSTATIC CONTROLLER/MIXING VALVE BELOW COUNTER AND SET FOR 105°F. PROVIDE PERFORATED GRID DRAIN WITH OFFSET AND 1-1/4" TAILPIECE SEMI-CAST BRASS P-TRAP WITH CLEANOUT, CHROME-PLATED RISERS WITH LOOSE KEY ANGLE STOPS. INSTALL P-TRAP PARALLEL AND ADJACENT TO WALL. INSULATE EXPOSED SUPPLIES AND DRAIN. COVER ALL INSULATION WITH PVC JACKET.
HS-1	AMERICAN STANDARD	LUCERNE 0356.015	LAVATORY: VITREOUS CHINA, 20" X 18" RECTANGULAR WALL HUNG LAVATORY, BACK OVERFLOW, CONCEALED HANGER, DRILLED FOR CONCEALED ARM CARRIER. PROVIDE WITH ZURN Z1231 WALL CARRIER.
	CHICAGO FAUCET	3500-4E2805ABCP	DECK MOUNTED SELF METERING, SINGLE-SUPPLY FOR TEMPERED WATER, FAUCET WITH 4" FIXED CENTERS, CHROME PLATED. INTEGRAL, CAST BRASS SPOUT, 4" CENTER-TO-CENTER. 0.5 GPM VANDAL-PROOF, PRESSURE COMPENSATING, ECONO-FLO, NON-AERATING SPRAY. MVP SELF-CLOSING, AUTO-TIMED METERING CARTRIDGE, ADJUSTABLE RUN TIME FROM 2 TO 15 SECONDS. OPENS WITH PUSH, 0.20 MAX GALLON/CYCLE. INCLUDE STAINLESS STEEL HOSE. PROVIDE WITH THERMOSTATIC MIXING VALVE SIMILAR TO LEONARD 170A-LF-BRKT WITH ASSE 1070 CERTIFICATION. SET OUTLET FOR 90F. MOUNT VALVE TO WALL WITH BRACKET BELOW LAV. DO NOT HANG FROM FLEX HOSES. PROVIDE PERFORATED GRID DRAIN WITH OFFSET AND 1-1/4" TAILPIECE SEMI-CAST BRASS P-TRAP WITH CLEANOUT, CHROME-PLATED RISERS WITH LOOSE KEY ANGLE STOPS. INSTALL P-TRAP PARALLEL AND ADJACENT TO WALL. INSULATE EXPOSED SUPPLIES AND DRAIN. COVER ALL INSULATION WITH PVC JACKET.
HB-1	CHICAGO FAUCET	293-369COLDCLP	INSIDE SILL FITTING WITH LEVER HANDLE AND THREADED OUTLET. PROVIDE ANTI-SIPHON VACUUM BREAKER ON OUTLET. MOUNT 24" ABOVE GRADE OR PER ARCHITECT'S REQUIREMENTS.
AS-1	JOHN BOOS	EPT8R5-3060GSK-L	STAINLESS STEEL NSF APPROVED PREP TABLE WITH SINK. CONSTRUCTED OF 18 GAUGE STAINLESS STEEL TOP WITH 5" RISER & TURNDOWN TYPE 430 STAINLESS STEEL WITH # 4 POLISH, SATIN FINISH 1 1/2" STALLION EDGE ON FRONT WITH SIDE EDGES 90 DEGREE BEND DOWN. PROVIDE WITH (1) 16" x 20" x 10" BOWL DECK MOUNT FAUCET HOLES 4" ON CENTER, 18 GAUGE STAINLESS STEEL TOP TYPE 430 STAINLESS STEEL WITH # 4 POLISH, SATIN FINISH 18 GAUGE GALVANIZED SHELF, 1 5/8" ROUND O.D. 16 GAUGE TUBULAR GALVANIZED STEEL LEGS WITH 1" ADJUSTABLE BULLET FEET.
	REGENCY	600FPRD	PRE-RINSE FAUCET: SINGLE HOLE DECK MOUNT MIXING FAUCET, ETERNA CARTRIDGES W/ SPRING CHECKS, LEVER HANDLES, 44" FLEXIBLE STAINLESS STEEL HOSE, 1.42 GPM SPRAY VALVE, 6" WALL BRACKET & FLEXIBLE STAINLESS STEEL SUPPLY HOSES PROVIDE TAILPIECE WITH 1-1/2" 17 GAUGE CHROME PLATED SEMI-CAST BRASS P-TRAP WITH CLEANOUT AND WASTE ARM TO WALL WITH ESCUTCHEON, RISERS WITH LOOSE KEY ANGLE STOPS.
S-1	CHICAGO FAUCET FAUCET BY CONTRACTOR AND INSTALL ON PAINT TROUGH BY OTHERS	3500-4E2805ABCP	DECK MOUNTED SELF METERING, SINGLE-SUPPLY FOR TEMPERED WATER, FAUCET WITH 4" FIXED CENTERS, CHROME PLATED. INTEGRAL, CAST BRASS SPOUT, 4" CENTER-TO-CENTER. 0.5 GPM VANDAL-PROOF, PRESSURE COMPENSATING, ECONO-FLO, NON-AERATING SPRAY. MVP SELF-CLOSING, AUTO-TIMED METERING CARTRIDGE, ADJUSTABLE RUN TIME FROM 2 TO 15 SECONDS. OPENS WITH PUSH, 0.20 MAX GALLON/CYCLE. INCLUDE STAINLESS STEEL HOSE. PROVIDE WITH THERMOSTATIC MIXING VALVE SIMILAR TO LEONARD 170A-LF-BRKT WITH ASSE 1070 CERTIFICATION. SET OUTLET FOR 100F. MOUNT VALVE TO WALL WITH BRACKET BELOW LAV. DO NOT HANG FROM FLEX HOSES. PROVIDE TAILPIECE WITH 1-1/2" 17 GAUGE CHROME PLATED SEMI-CAST BRASS P-TRAP WITH CLEANOUT AND WASTE ARM TO WALL WITH ESCUTCHEON, RISERS WITH LOOSE KEY ANGLE STOPS. INSULATE EXPOSED SUPPLIES AND DRAIN. COVER ALL INSULATION WITH PVC JACKET.
S-2	ELKAY	ELUH1814	UNDEREMOUNT SINK (SINGLE): 20.5" x 16.5" x 7.875" SINGLE COMPARTMENT, UNDERMOUNT, 304, 18 GAUGE STAINLESS STEEL SINK WITH CENTER REAR DRAIN. COORDINATE SINK CUT-OUT WITH CASEWORK INSTALLER.
	DELTA	B1310LF	FAUCET: CHROME PLATED BRASS, DECK MOUNT 3-HOLE, 8" CENTERSET FAUCET WITH 9.5" SWIVEL SPOUT AND SINGLE LEVER FAUCET.
	EZ-FLO	10896	CHROME PLATED GLASS FILLER WITH LEVER OPERATION. MOUNT TO SIDE OF FAUCET. COORDINATE EXACT LOCATION TO AVOID INTERFERING WITH FAUCET OPERATION AND STILL KEEP OUTLET WITHIN SINK. PROVIDE WITH THERMOSTATIC MIXING VALVE SIMILAR TO LEONARD 170A-LF-BRKT WITH ASSE 1070 CERTIFICATION. SET OUTLET FOR 100F. MOUNT VALVE TO WALL WITH BRACKET BELOW LAV. DO NOT HANG FROM FLEX HOSES. PROVIDE TAILPIECE WITH 1-1/2" 17 GAUGE CHROME PLATED SEMI-CAST BRASS P-TRAP WITH CLEANOUT AND WASTE ARM TO WALL WITH ESCUTCHEON, RISERS WITH LOOSE KEY ANGLE STOPS. INSULATE EXPOSED SUPPLIES AND DRAIN. COVER ALL INSULATION WITH PVC JACKET.
S-3	AMERICAN STANDARD	OVALYN 0495.300	LAVATORY: LAVATORY: VITREOUS CHINA, 19-1/4" X 15-3/4" OVAL UNDERMOUNT LAVATORY, BACK OVERFLOW.
	AMERICAN STANDARD	7545.170	FAUCET: CHROME PLATED BRASS, CENTETR SET LEDGE FAUCET WITH LIMITED SWIVEL GOOSENECK SPOUT AND TAPER BODY STYLE BODY WITH LAMINAR FLOW OUTLET, QUATURN OPERATING CERAMIC CARTRIDGE. PROVIDE WITH THERMOSTATIC MIXING VALVE SIMILAR TO LEONARD 170A-LF-BRKT WITH ASSE 1070 CERTIFICATION. SET OUTLET FOR 100F. MOUNT VALVE TO WALL WITH BRACKET BELOW LAV. DO NOT HANG FROM FLEX HOSES. PROVIDE TAILPIECE WITH 1-1/2" 17 GAUGE CHROME PLATED SEMI-CAST BRASS P-TRAP WITH CLEANOUT AND WASTE ARM TO WALL WITH ESCUTCHEON, RISERS WITH LOOSE KEY ANGLE STOPS. INSULATE EXPOSED SUPPLIES AND DRAIN. COVER ALL INSULATION WITH PVC JACKET.
SS-1	STERN WILLIAMS	SB-902	24"x24"x12" MOP SERVICE BASIN, CAST BRASS DRAIN, STAINLESS STEEL DOME STRAINER, 3" DRAIN CONNECITN WITH STAINLESS STEEL BUMPER GUARD, 10" STAINLESS STEEL BACK PANEL ON TWO SIDES AND WILLIAMS NO. T-35 3 FT. RUBBER HOSE WITH STIANLESS STEEL WALL BRACKET.
	CHICAGO FAUCET	897	CHICAGO FAUCET WITH CERAMIC CARTRIDGE AND VAUUM BREAKER, 3/4" HOSE THREAD ON SPOUT, WALL BRACE, PAIL HOOK AND FLANGED ADJUSTABLE ARMS WITH INTEGRAL STOPS.
FD-1	WADE	1100-STD6	CAST IRON FLOOR DRAIN WITH FLANGE, INTEGRAL REVERSIBLE CLAMPING COLLAR, SEEPAGE OPENINGS, 1/2" PLUGGED PRIMER TAP, AND 6" DIA. NICKEL BRONZE STRAINER WITH VANDAL-PROOF SCREWS. OUTLET SIZE PER PLAN. PROVIDE DEEP SEAL TRAP AND TRAP GUARD SIMILAR TO SURE SEAL BY RECTOR SEAL.
FS-1	SIOUX CHIEF	861-N	CAST IRON ACID RESISTANT COATED FLOOR DRAIN WITH FLANGE/CLAMPING COLLAR, SEEPAGE OPENINGS AND 12" X 12" 1/2 GRATE NICKEL BRONZE TOP WITH VANDAL-PROOF SCREWS AND 6" DEEP SUMP ALUMINUM SEDIMENT BUCKET AND PLUGGED 1/2" TRAP PRIMER TAP. PROVIDE WITH AIRGAP/FUNNEL FITTING.

COORDINATE FIXTURE HEIGHTS WITH ARCHITECTURAL DRAWINGS/ELEVATIONS.
VERIFY DROP IN SINK SIZES FIT WITHIN CASEWORK PRIOR TO ORDERING.

PLUMBING PIPE MATERIAL SCHEDULE

PIPING SYSTEM	ABBREVIATION	PIPING MATERIAL
SANITARY WASTE AND VENT (ABOVE GRADE)	W OR V	HUBLESS CAST IRON OR PVC
STORM DRAINAGE (ABOVE GRADE)	SD OR OD	HUBLESS CAST IRON OR PVC
SANITARY WASTE AND VENT (BELOW GRADE)	W OR V	HUBLESS CAST IRON OR PVC
STORM DRAINAGE (BELOW GRADE)	SD OR OD	HUBLESS CAST IRON OR PVC
ACID RESISTANT WASTE AND VENT	AW OR AV	POLYPROPYLENE
POTABLE WATER-2" & SMALLER (ABOVE GRADE)	CW	TYPE M HARD DRAWN COPPER
POTABLE WATER-2" & SMALLER (BELOW GRADE)	CW	TYPE K SOFT ANNEALED COPPER
POTABLE WATER-3"	CW	TYPE M HARD DRAWN COPPER, DUCTILE IRON
POTABLE WATER-4" & LARGER	CW	DUCTILE IRON
CONDENSATE/INDIRECT DRAIN-1" & SMALLER	ID	TYPE M HARD DRAWN COPPER
CONDENSATE/INDIRECT DRAIN-1-1/4" LARGER	ID	TYPE DWV HARD DRAWN COPPER
FIRE PROTECTION-3" & LARGER (BELOW GRADE)	FP	DUCTILE IRON
FIRE PROTECTION (ABOVE GRADE)	FP	SCHEDULE 10 OR 30 BLACK STEEL
DRY FIRE PROTECTION	FP	GALVANIZED SCHEDULE 10 OR 30

REFER TO SPECIFICATIONS FOR FITTINGS, INSTALLATION REQUIREMENTS AND FURTHER INFORMATION.

BRANCH FIXTURE SCHEDULE 1

PLUMBING FIXTURE OR ITEMS	DRAIN-WASTE-SOIL-VENT					COLD WATER		HOT WATER		FIXTURE TYPE SEE SPECIFICATIONS	REMARKS
	TRAP	ARM	VERT	HORIZ	VENT	SUPPLY	BRANCH	SUPPLY	BRANCH		
ADA WATER CLOSET	INT	3"	4"	4"	2"	1"	1-1/4"	-	-	WC-1	NOTE 1
CHILD WATER CLOSET	INT	3"	4"	4"	2"	1"	1-1/4"	-	-	WC-2	
CHILD LAV	1-1/2"	1-1/2"	1-1/2"	2"	1-1/2"	3/8"	1/2"	3/8"	1/2"	LV-2	
ADA LAVATORY	1-1/2"	1-1/2"	1-1/2"	2"	1-1/2"	3/8"	1/2"	3/8"	1/2"	LV-1	NOTE 1
HOSE BIBB	-	-	-	-	-	3/4"	3/4"	-	-	HB-1	
HAND SINK	1-1/2"	1-1/2"	2"	2"	1-1/2"	3/8"	1/2"	3/8"	1/2"	HS-1	NOTE 1
PREP TABLE WITH SINK	1-1/2"	1-1/2"	2"	2"	1-1/2"	3/8"	1/2"	3/8"	1/2"	AS-1	
PAINT TROUGH	1-1/2"	1-1/2"	2"	2"	1-1/2"	3/8"	1/2"	3/8"	1/2"	S-1	NOTE 1
SINK	1-1/2"	1-1/2"	2"	2"	1-1/2"	3/8"	1/2"	3/8"	1/2"	S-2, S-3	NOTE 1
SERVICE SINK	3"	3"	3"	3"	1-1/2"	1/2"	1/2"	1/2"	1/2"	SS-1	
2" FLOOR DRAIN	2"	2"	2"	2"	2"	-	-	-	-	FD-1	
2" FLOOR SINK	2"	2"	2"	2"	2"	-	-	-	-	FS-1	

REMARKS: 1.) FIXTURE TO BE ACCESSIBLE FOR THOSE WITH DISABILITIES.

WATER HEATER SCHEDULE

IDENTITY DATA				TANK LINING	CAPACITY (gal)	RISE ΔT (°F)	RECOVERY (gal/h)	INPUT kW	ELECTRICAL DATA					WEIGHT (lbs)	REMARKS
MARK	#	MANUFACTURER	MODEL NO.						VOLTS	ø	HZ	FLA (A)	MCA (A)		
WH	1	A.O. SMITH	DRE-52-18	GLASS	40	100	49.20	12.0	480	3	60	14.4	18.0	265	NOTE 1

REMARKS: 1.) PROVIDE WITH DRAIN VALVE, T&P RELIEF VALVE, EXPANSION TANK AND ISOLATION VALVES.

PLUMBING PUMP SCHEDULE

IDENTITY DATA				DESCRIPTION	FLOW (gpm)	HEAD (ftH2O)	RPM	WATTS	ELECTRICAL DATA				REMARKS
MARK	#	MANUFACTURER	MODEL NO.						VOLTS	ø	HZ	FLA	
CP	1	BELL & GOSSETT	NBF-33	WET ROTOR POTABLE IN-LINE HOT WATER RECIRCULATION	5	10	2950	125	120	1	60	1.1	NOTE 1

REMARKS: 1.) PROVIDE PUMP FOR USE IN OPEN POTABLE WATER SYSTEMS WITH LEAD FREE CONSTRUCTION, STRAP ON AQS AQUASTAT, THERMALLY PROTECTED MOTOR AND TOGGLE DISCONNECT SWITCH.

PLUMBING SYMBOLS

Symbol	Description
(heavy line)	NEW PIPING
CW	COLD WATER
HW	HOT WATER
HWR	HOT WATER RECIRC.
V	SANITARY VENT ABOVE GND./FLOOR ABOVE
— V — (dashed)	SANITARY VENT BELOW FLOOR
W	SANITARY WASTE ABOVE GND./FLOOR ABOVE
— W — (dashed)	SANITARY WASTE BELOW GROUND
AW	ACID WASTE
AV	ACID VENT
NG	NATURAL GAS (PRESSURE INDICATED IN PSI)
SD	PRIMARY STORM DRAIN
OD	EMERGENCY/SECONDARY STORM DRAIN
CD	CONDENSATE DRAIN
	SHUT OFF VALVE
	GAS SHUT-OFF COCK
	CHECK VALVE
	UNION
	PIPE DROP/PIPE RISE
	BOTTOM OUTLET TEE
	TOP OUTLET TEE
WH	WALL HYDRANT
CO	CLEAN OUT
WCO	WALL CLEAN OUT
VTR	SANITARY VENT THRU ROOF
OR FD	FLOOR DRAIN
FCO	FINISHED FLOOR CLEANOUT
(ellipse)	PLUMBING FIXTURE DESIGNATION

GENERAL NOTES

A.) PLUMBING CONTRACTOR IS RESPONSIBLE TO SEE THAT WORK MEETS AND IS IN ACCORDANCE WITH ALL REQUIREMENTS OF FEDERAL, STATE, AND LOCAL LAWS AND CODES AND/OR REQUIREMENTS, INCLUDING HEALTH CODES AND BUILDING OWNER.

B.) GAS PIPING INSTALLED IN CONCEALED LOCATIONS SHALL HAVE FITTINGS LISTED FOR CONCEALED INSTALLATIONS OR PIPE SHALL BE SLEEVED AND VENTED PER CODE.

C.) COORDINATE ALL WORK WITH OTHER TRADES PRIOR TO INSTALLATION TO AVOID ROUTING CONFLICTS. COORDINATION SHALL TAKE PLACE DURING ON SITE MEETINGS AND INCLUDE THE REVIEW OF SHOP DRAWINGS FROM THE FIRE PROTECTION AND SHEET METAL CONTRACTORS.

D.) WASTE/VENT PIPING LOCATED ABOVE CEILING SHALL BE CAST IRON AS SPECIFIED. NO PVC PIPING WITHIN PLENUM IS ALLOWED.

E.) DRAWINGS AREA DIAGRAMMATIC REPRESENTATION OF THE PLUMBING SYSTEM. CONTRACTOR SHALL CONFORM TO THE DRAWINGS INTENT BUT CHANGES IN ROUTING AND LOCATION ARE EXPECTED DUE TO ONSITE JOB CONDITIONS. ADDITIONAL COMPENSATION WILL NOT BE AWARDED FOR SUCH CHANGES AND SHOULD BE ACCOUNTED FOR IN CONTRACTOR'S BID.

F.) CONTRACTOR SHALL PROVIDE COMPLETE PLUMBING SYSTEMS AS DETAILED ON THESE DRAWINGS. WORK CONSISTS OF FURNISHING MATERIALS, EQUIPMENT, AND SERVICES REQUIRED FOR COMPLETE SYSTEMS. INCLUDE ANY INCIDENTAL APPARATUS, APPLIANCES, MATERIAL LABOR AND SERVICES NECESSARY TO MAKE NEW WORK COMPLETE IN ALL RESPECTS AND FULLY READY FOR OPERATION.

G.) WHERE VALVES OCCUR ABOVE DRYWALL OR PLASTER CEILINGS OR CONCEALED BEHIND WALLS, CONTRACTOR SHALL FURNISH AND INSTALL ACCESS PANELS. PANEL TO MATCH FINISH.

H.) EXACT NUMBER AND TYPE OF PLUMBING FIXTURES SHALL BE DETERMINED FROM ARCHITECTURAL DRAWINGS. VERIFY SUCH LOCATIONS BEFORE PROCEEDING WITH ANY ROUGH-IN WORK.

I.) PROVIDE DIELECTRIC UNIONS AT ALL CONNECTIONS BETWEEN DISSIMILAR PIPING METALS.

J.) NO VENT THROUGH ROOF SHALL TERMINATE CLOSER THAN 10'-0" TO ANY OUTSIDE AIR INTAKE.

K.) ALL EXTERIOR PIPING BELOW GRADE SHALL BE A MINIMUM OF 42" BELOW GRADE OR BURIED BELOW LOCAL FREEZE LINE, WHICHEVER IS GREATER.

L.) PIPING IN CONCRETE BLOCK WALLS SHALL BE INSTALLED AS BLOCK IS BEING LAID. DO NOT CUT BLOCK WALL.

M.) PROVIDE ALL SINKS AND LAVATORIES WITH SLIP JOINT TRAP FITTING FOR CLEANOUT.

N.) UPON COMPLETION OF WORK UNDER THIS CONTRACT, THE CONTRACTOR SHALL REMOVE ALL TOOLS, APPLIANCES, SURPLUS MATERIALS AND SCRAP.

O.) WHEN CONFLICTS OCCURS IN SPECIFICATIONS OR IN THE DRAWINGS, OR BETWEEN EITHER, THE ITEMS OF GREATER QUALITY OR HIGHER COST SHALL BE INCLUDED.

P.) UTILITIES. THE CONTRACTOR SHALL COMPLY WITH RULES AND REGULATIONS OF PUBLIC UTILITIES AND MUNICIPAL DEPARTMENTS AFFECTED BY CONNECTIONS OF SERVICES. THE CONTRACTOR SHALL PAY ALL FEES ASSOCIATED THERE WITH.

Q.) TRENCHING, BACKFILL AND CONCRETE WORK ASSOCIATED WITH PLUMBING SHALL BE PROVIDED IN ACCORDANCE WITH THE APPLICABLE SPECIFICATIONS.

R.) ALL FLOOR DRAIN LOCATIONS SHALL BE COORDINATED WITH THE ARCHITECT BEFORE ROUGH-IN WORK SHALL BEGIN. CONTRACTOR SHALL COORDINATE FINAL FINISH OF ALL FLOOR DRAINS WITH ARCHITECT.

S.) ALL FLOOR SINKS UNDER EQUIPMENT SHALL BE HALF EXPOSED AND READILY ACCESSIBLE FOR INSPECTION AND CLEANING. INSTALL FLOOR SINKS FLUSH WITH FINISHED FLOOR.

T.) ALL ROOFING PENETRATIONS SHALL BE FLASHED AND COUNTER FLASHED. WORK SHALL BE COORDINATED WITH ROOFING CONTRACTOR.

U.) HANGER RODS AND DEVICES SHALL BE USED FOR ALL PIPING. PROVIDE HANGERS SIZED TO FIT INSULATION WITH GALVANIZED SADDLE AS REQUIRED. MAKE SHIFT DEVICES SHALL NOT BE ACCEPTABLE. SPACE HANGERS TO COMPLY WITH THE ACCEPTABLE SECTION OF THE INTERNATIONAL PLUMBING CODE.

V.) DOMESTIC WATER PIPING SHALL BE DISINFECTED IN ACCORDANCE WITH THE REQUIREMENTS OF THE STATE ADMINISTRATIVE CODE. PROVIDE CERTIFICATION CONFIRMING TESTING AND COMPLIANCE TO THE OWNER.

W.) LICENSES/CODES. THE CONTRACTOR SHALL BE LICENSED TO PERFORM WORK IN THE MUNICIPALITY IN WHICH THE PROJECT IS LOCATED. ALL PRODUCTS AND TYPES OF CONSTRUCTION SHALL MEET OR EXCEED THE LATEST EDITION OF APPLICABLE STANDARDS OF MANUFACTURER, TESTING, PERFORMANCE AND INSTALLATION. WORK PERFORMED UNDER THIS CONTRACT SHALL, AT A MINIMUM, BE IN CONFORMANCE WITH APPLICABLE NATIONAL, STATE AND LOCAL CODES HAVE JURISDICTION. EQUIPMENT FURNISHED AND ASSOCIATED INSTALLATION WORK PERFORMED UNDER THIS CONTRACT SHALL BE IN STRICT COMPLIANCE WITH CURRENT APPLICABLE CODES ADOPTED BY THE LOCAL AHJ INCLUDING ANY AMENDMENTS AND STANDARDS AS SET FORTH BY THE NATIONAL FIRE PROTECTION ASSOCIATION (NFPA), UNDERWRITERS LABORATORIES (UL), OCCUPATIONAL SAFETY AND HEALTH ADMINISTRATION (OSHA), AMERICAN SOCIETY OF MECHANICAL ENGINEERS (ASME), AMERICAN SOCIETY OF HEATING, REFRIGERATION AND AIR CONDITIONING ENGINEERS (ASHRAE), AMERICAN NATIONAL STANDARDS INSTITUTE (ANSI), AMERICAN SOCIETY OF TESTING MATERIALS (ASTM) AND OTHER NATIONAL STANDARDS AND CODES WHERE APPLICABLE. WHERE THE CONTRACT DOCUMENTS EXCEEDS THE REQUIREMENTS OF THE REFERENCED CODES, STANDARDS, ETC., THE CONTRACT DOCUMENTS SHALL TAKE PRECEDENCE. WHERE REQUIRED, OBTAIN, PAY FOR AND FURNISH CERTIFICATES OF INSPECTION TO THE OWNER. THE CONTRACTOR WILL BE HELD RESPONSIBLE FOR ANY VIOLATION OF THE LAW. MAINTAIN NECESSARY SIGNAL LIGHTS AND GUARDS FOR THE SAFETY OF THE PUBLIC. THE WORK SHALL COMPLY WITH THE EDITION OF THE APPLICABLE STANDARDS, REGULATIONS AND CODES CURRENTLY IN FORCE OF ALL STATE AND LOCATION AUTHORITIES HAVING JURISDICTION. WHERE QUANTITIES, SIZES, OR OTHER REQUIREMENTS INDICATED ON THE DRAWINGS OR HEREIN SPECIFIED ARE IN EXCESS OF THE STANDARD OR CODE REQUIREMENTS, THE SPECIFICATIONS AND/OR DRAWINGS SHALL GOVERN. IN THE ABSENCE OF OTHER APPLICABLE LOCAL CODES, ACCEPTABLE TO THE ARCHITECT/ENGINEER, AND UNIFORM PLUMBING AND MECHANICAL CODES SHALL APPLY TO THIS WORK.

GENERAL NOTES

X.) THE CONTRACTOR SHALL BE RESPONSIBLE FOR THE ACQUISITION AND PAYMENT OF ALL FEES, PERMITS AND INSPECTIONS REQUIRED. COORDINATE WITH THE WORK OF OTHER SECTIONS, EQUIPMENT FURNISHED BY OTHERS, REQUIREMENT OF OWNER AND WITH THE CONSTRAINTS OF THE EXISTING CONDITIONS OF THE PROJECT SITE. PROVIDE DUCT RISES AND DROPS AS REQUIRED FOR FIELD INSTALLATION AND TRADE COORDINATION. NOTIFY ARCHITECT OF ANY DISCREPANCIES BEFORE STARTING WORK.

Y.) PROTECTION. STORE AND PROTECT FROM DAMAGE EQUIPMENT AND MATERIALS DELIVERED TO JOB SITE. COVER WITH WATERPROOF, TEAR RESISTANT, HEAVY TARP OR POLYETHYLENE PLASTIC AS REQUIRED TO PROTECT FROM PLASTER, DIRT, PAINT, WATER OR PHYSICAL DAMAGE. EQUIPMENT AND MATERIAL THAT HAS DAMAGED BY CONSTRUCTION ACTIVITIES WILL BE REJECTED AND THE CONTRACTOR IS OBLIGATED TO FURNISH NEW EQUIPMENT AND MATERIAL OF A LIKE KIND. PLUG OR CAP OPEN ENDS OF PIPING SYSTEMS WHILE STORED AND INSTALLED DURING CONSTRUCTION WHEN NOT IN USE TO PREVENT THE ENTRANCE OF DEBRIS INTO THE SYSTEMS. KEEP THE MANUFACTURER-PROVIDED PROTECTIVE COVERINGS ON FLOOR DRAINS, FLOOR SINKS AND TRENCH DRAINS DURING CONSTRUCTION. REMOVE COVERINGS AT THE TERMINATION OF THE WORK AND POLISH EXPOSED SURFACES.

Z.) ELECTRONIC DRAWINGS. IN PREPARATION OF SHOP DRAWINGS, CONTRACTOR MAY AT THEIR OPTION, OBTAIN ELECTRONIC DRAWING FILES IN AUTOCAD FORMAT FROM THE ENGINEER FOR A SHIPPING AND HANDLING FEE OF $20 PER SHEET, $50 MINIMUM. CONTRACTOR SHALL CONTACT THE ARCHITECT FOR WRITTEN AUTHORIZATION FORM TO BE SIGNED AND RETURNED.

AA.) FLOOR DRAINS THAT DO NOT SHOW A SLOPING FLOOR ON ARCHITECTURAL DRAWINGS SHALL HAVE A SLOPING DOME 6'-0" IN DIAMETER TOWARDS THE DRAIN.

BB.) CONTRACTOR SHALL CAULK/SEAL EVERY WALL PENETRATION AS SPECIFIED BY ARCHITECT OR ENGINEER. WHERE WALL IS SMOKE/FIRE RATED CONTRACTOR SHALL PROVIDE REQUIRED U.L. FIRE STOP. IF THE ARCHITECTURAL AND MECHANICAL SPECIFICATIONS REGARDING CAULKING/SEALING ARE NOT CONSISTENT CONTRACTOR SHALL USE THE MOST STRINGENT.

CC.) INTENT. BY SUBMITTING A BID THE CONTRACTOR ACCEPTS RESPONSIBILITY TO PROVIDE A COMPLETE PLUMBING SYSTEM BASED ON THE INTENT OF THESE DRAWINGS. THE DRAWINGS SHALL SERVE AS WORKING DRAWINGS FOR THE GENERAL LAYOUT OF THE VARIOUS ITEMS OF EQUIPMENT; ARE DIAGRAMMATIC; AND DO NOT NECESSARILY INDICATE EVERY REQUIRED ITEM. AS SUCH THE CONTRACTOR SHALL INCLUDE AS A PART OF HIS BID ALL WORK, MATERIALS, LABOR, EQUIPMENT, TOOLS, INSURANCE, TAXES, SERVICES, APPURTANCES, ETC. TO MAKE A COMPLETE OPERATIONAL SYSTEM. CONTRACTOR SHALL ASSUME FULL RESPONSIBILITY FOR ALL OBLIGATIONS ASSOCIATED WITH COMPLETION OF MECHANICAL WORK AS PROVIDED BY THE CONTRACT DOCUMENTS.

DD.) CHANGES. CONTRACTOR SHALL NOT MAKE ANY CHANGE TO OR DEVIATE FROM THE CONTRACT DOCUMENTS WITHOUT WRITTEN APPROVAL FROM THE ARCHITECT/ENGINEER. THE ARCHITECT/ENGINEER WILL NOT BE RESPONSIBLE OR LIABLE FOR ANY CHANGES MADE WITHOUT THE ENGINEER'S KNOWLEDGE AND APPROVAL.

EE.) QUESTIONS. ANY QUESTIONS THAT ARISE IN THE FIELD OR UPON REVIEW OF THE CONTRACT DRAWINGS THE CONTRACTOR SHALL SUBMIT THE QUESTION IN WRITING TO THE ARCHITECT/ENGINEER FOR CLARIFICATION. A PHONE CALL IS PERMISSIBLE BUT MUST BE FOLLOWED BY WITH THE WRITTEN SUBMISSION.

FF.) DOCUMENTS. CONTRACTOR SHALL READ AND BE FAMILIAR WITH THE REQUIREMENTS WITHIN ALL DRAWINGS AND SPECIFICATIONS. INFORMATION REGARDING THE COMPLETE WORK IS DISPERSED THROUGHOUT THE DOCUMENT SET AND CAN NOT BE ACCURATELY DETERMINED WITHOUT REFERENCE TO THE COMPLETE DOCUMENT SET. HE SHALL EXAMINE THE ARCHITECTURAL, STRUCTURAL, MECHANICAL AND ELECTRICAL DRAWINGS AND SPECIFICATIONS TO FAMILIARIZE HIMSELF WITH THE TYPE OF CONSTRUCTION, MATERIALS, AND EQUIPMENT TO BE USED FOR ALL WORK AND HOW IT WILL AFFECT THE INSTALLATION OF HIS CONTRACT. BY THE ACT OF SUBMITTING A BID, THE CONTRACTOR WILL BE DEEMED TO HAVE MADE SUCH EXAMINATION, TO HAVE ACCEPTED SUCH CONDITIONS, TO HAVE MADE ALLOWANCE THEREFOR, AND INCLUDED ALL COSTS IN HIS PROPOSAL. FAILURE TO DETERMINE EXISTING CONDITIONS WILL NOT BE CONSIDERED A BASIS FOR THE GRANTING OF ADDITIONAL COMPENSATION.

GG.) SCHEDULING. COORDINATE WORK WITH THAT OF OTHER TRADES SO THAT THE VARIOUS COMPONENTS OF THE SYSTEMS WILL BE INSTALLED AT THE PROPER TIME, WILL FIT THE AVAILABLE SPACE, AND WILL ALLOW PROPER SERVICE ACCESS TO THOSE ITEMS REQUIRING MAINTENANCE. COMPONENTS WHICH ARE INSTALLED WITHOUT REGARD TO THE ABOVE SHALL BE RELOCATED AT NO ADDITIONAL COST TO THE OWNER.

HH.) DIMENSIONS. FIGURED DIMENSIONS SHALL BE TAKEN IN PREFERENCE TO SCALE DIMENSIONS. CONTRACTOR SHALL TAKE HIS OWN MEASUREMENTS AT THE BUILDING, AS VARIATIONS MAY OCCUR. CONTRACTOR WILL BE HELD RESPONSIBLE FOR ERRORS THAT COULD OF HAVE BEEN AVOIDED BY PROPER CHECKING AND INSPECTION.

II.) TRIM. PROVIDE MATERIALS WITH TRIM THAT WILL PROPERLY FIT THE TYPES OF CEILING, WALL OR FLOOR FINISHES ACTUALLY INSTALLED. MODEL NUMBERS LISTED IN THE SPECIFICATION OR SHOWN ON THE DRAWINGS ARE NOT INTENDED TO DESIGNATE THE REQUIRED TRIM.

JJ.) DRAWING PRIORITY. THE ARCHITECTURAL AND STRUCTURAL DRAWINGS TAKE PRECEDENCE OVER THE MECHANICAL AND ELECTRICAL DRAWINGS IN THE REPRESENTATION OF THE GENERAL CONSTRUCTION WORK.

KK.) SUBSTITUTIONS. CONTRACTOR'S BIDS SHALL BE BASED ON THE MATERIAL MENTIONED OR SPECIFIED, AND ANY PROPOSALS FOR A SUBSTITUTION SHALL BE MADE IN WRITING TO THE ARCHITECT/ ENGINEER ALLOWING ADEQUATE TIME FOR APPROPRIATE ACTION. THE PRODUCTS OF OTHER MANUFACTURERS MAY BE ACCEPTED, IF IN THE OPINION OF THE ARCHITECT/ENGINEER, THE SUBSTITUTE MATERIAL IS OF A QUALITY AS GOOD OR BETTER THAN THE MATERIAL SPECIFIED, AND WILL SERVE WITH EQUAL EFFICIENCY AND DEPENDABILITY, THE PURPOSE FOR WHICH THE ITEMS SPECIFIED WERE INTENDED. THE BURDEN OF PROOF OF EQUALITY IS UPON THE PROPOSER.

LL.) SHOP DRAWINGS. SHOP DRAWINGS AND CATALOG DATA ON ALL MAJOR ITEMS OF EQUIPMENT AND APPARATUS, AND SUCH OTHER ILLUSTRATIVE MATERIALS AS MAY BE CONSIDERED NECESSARY BY THE ARCHITECT/ENGINEER SHALL BE SUBMITTED BY THE CONTRACTOR IN ADEQUATE TIME TO PREVENT DELAY AND CHANGES DURING CONSTRUCTION. BEFORE SUBMITTING SHOP DRAWINGS AND MATERIAL LISTS, VERIFY THAT EQUIPMENT SUBMITTED IS MUTUALLY COMPATIBLE AND SUITABLE FOR THE INTENDED USE AND WILL FIT THE AVAILABLE SPACE AND ALLOW AMPLE ROOM FOR MAINTENANCE. THE ENGINEER'S CHECKING AND SUBSEQUENT APPROVAL OF SUCH SHOP DRAWINGS WILL NOT RELIEVE THE CONTRACTOR FROM RESPONSIBILITY FOR ERRORS IN DIMENSIONS, DETAILS, SIZE OF MEMBERS, QUANTITIES, OMISSIONS OF COMPONENTS OR FITTINGS; COORDINATION OF ELECTRICAL REQUIREMENTS; OR FOR COORDINATING ITEMS WITH ACTUAL BUILDING CONDITIONS. PROCEED WITH THE PROCUREMENT AND INSTALLATION OF EQUIPMENT ONLY AFTER RECEIVING APPROVED SHOP DRAWINGS RELATIVE TO EACH ITEM. CATALOG DATA SHALL BE PROPERLY BOUND, IDENTIFIED, INDEXED AND TABBED. EACH ITEM OR MODEL NUMBER SHALL BE CLEARLY MARKED AND ACCESSORIES INDICATED. LABEL THE CATALOG DATA WITH THE EQUIPMENT IDENTIFICATION ACRONYM OR NUMBER AS USED ON THE DRAWINGS AND INCLUDE PERFORMANCE CURVES, CAPACITIES, SIZES, MATERIALS, FINISHES, WIRING DIAGRAMS AND DEVIATIONS FROM SPECIFIED EQUIPMENT OR MATERIALS. MARK OUT INAPPLICABLE ITEMS. SHOP DRAWINGS WILL BE RETURNED WITHOUT REVIEW IF THE ABOVE REQUIREMENTS ARE NOT MET.

PGAV ARCHITECTS
PECKHAM GUYTON ALBERS & VIETS, INC.
1900 W.47th Place, #300, Westwood, KS 66205
(913) 362-6500 www.PGAV.COM
Copyright ©2015

STATE OF MISSOURI
DOMINICK V. RUCERETO
NUMBER E-2001004656
7/3/19
REGISTERED PROFESSIONAL ENGINEER

THE SEAL AND SIGNATURE APPLY ONLY TO THE DOCUMENT TO WHICH THEY ARE AFFIXED, AND EXPRESSLY DISCLAIM ANY RESPONSIBILITY FOR ALL OTHER PLANS, SPECIFICATIONS, ESTIMATES, REPORTS, OR OTHER DOCUMENTS OR INSTRUMENTS RELATING TO OR INTENDED TO BE USED FOR ANY PART OR PARTS OF THE ARCHITECTURAL OR ENGINEERING PROJECT.

#	DATE	DESCRIPTION

USKC EARLY CHILDHOOD EXHIBITS

SCIENCE CITY @ UNION STATION
30 W. PERHSING RD
KANSAS CITY, MO 64108

CONSTRUCTION DOCUMENTS

Original Size: 1 1/2" Drawing may have been reduced.
0" 1"

PLUMBING SCHEDULES

bgr Consulting Engineers
Ph: 816.842.2800
Fx: 816.842.4884
CERTIFICATE OF AUTHORITY
2006007202

DATE: 07/03/2019
DRAWN: DVR
CHECKED: DVR
PGAV #: 53494-00
CLIENT #:
SHEET #: **P710**

C:\Users\Dominick\Documents\(v16) 17-xUnion Station-Mech_drucereto.rvt
6/28/2019 10:34:18 AM

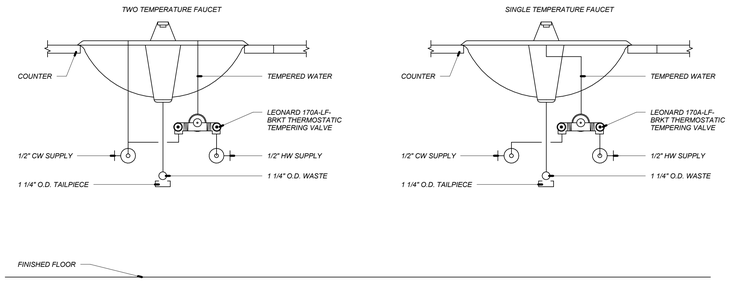

1 LOCAL MIXING VALVE DETAIL
SCALE: NONE

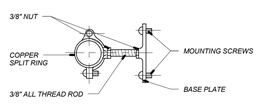

GRINNEL CT-130R SUPPORT DETAIL

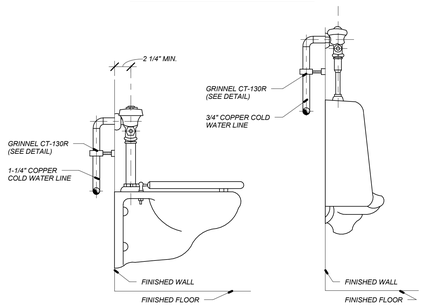

2 FLUSH VALVE BRACKET SUPPORT DETAIL
SCALE: NONE

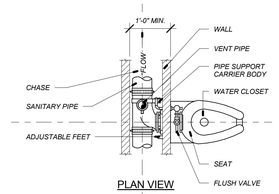

PLAN VIEW

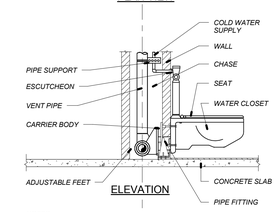

ELEVATION

NOTES:
1.) FOR CONTINUATION OF PIPING, SEE PLANS.

3 SINGLE WALL HUNG WATER CLOSET DETAIL
SCALE: NONE

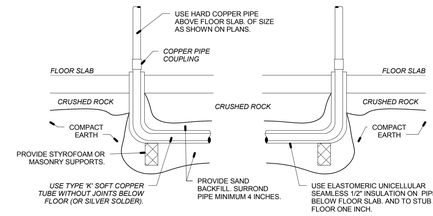

NOTE: IF FLOOR SLAB IS EXISTING, SAW CUT, EXCAVATE, BACKFILL, REPAIR VAPOR BARRIER, PATCH CONCRETE FLOOR. PIPE SHALL HAVE LONG RADIUS TURNS WITHOUT KINKS THERE SHALL BE NO CONTACT OF COPPER TUBE WITH OTHER PIPE, CONDUIT, OR REINFORCING STEEL.

4 UNDERSLAB PIPING
SCALE: NO SCALE

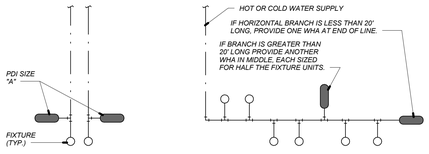

SINGLE FIXTURE

PDI SIZE	PIPE SIZE	FIXTURE UNIT LOAD
A	1/2"	1-11
B	3/4"	12-32
C	1"	33-60
D	1 1/4"	61-113
E	1 1/2"	114-154
F	2"	155-330

MULTIPLE FIXTURES

FIXTURE UNIT TABULATION		
FIXTURE	COLD	HOT
VALVE WATER CLOSET	10	--
TANK WATER CLOSET	5	--
URINAL	5	--
LAVATORY/SINK	1.5	1.5
JANITOR'S SINK	3	3
SHOWER/BATHTUB	2	2

NOTES:
1.) DO NOT PROVIDE AIR CHAMBERS. PROVIDE WATER HAMMER ARRESTORS BY SIOUX CHIEF OR APPROVED EQUIVALENT WITH PISTON AND O-RING CONSTRUCTION, HAVING PDI #WH-201, ASSE # 1010, AND ANSI # A112.26.1M CERTIFICATION. INSTALL IN HORIZONTAL OR VERTICAL POSITION, BUT NEVER UPSIDEDOWN. INSTALL IN LINE WITH WATER FLOW DIRECTION IF POSSIBLE. SIZE THE UNITS PER THE TABLES SHOWN ABOVE.
2.) INSTALL PER PDI STANDARDS AND MANUFACTURER'S INSTRUCTIONS.

5 WATER HAMMER ARRESTOR DETAIL
SCALE: NONE

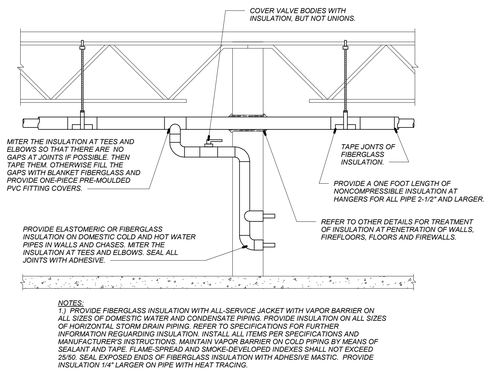

NOTES:
1.) PROVIDE FIBERGLASS INSULATION WITH ALL-SERVICE JACKET WITH VAPOR BARRIER ON ALL SIZES OF DOMESTIC WATER AND CONDENSATE PIPING. PROVIDE INSULATION ON ALL SIZES OF HORIZONTAL STORM DRAIN PIPING. REFER TO SPECIFICATIONS FOR FURTHER INFORMATION REGUARDING INSULATION. INSTALL ALL ITEMS PER SPECIFICATIONS AND MANUFACTURER'S INSTRUCTIONS. MAINTAIN VAPOR BARRIER ON COLD PIPING BY MEANS OF SEALANT AND TAPE. FLAME-SPREAD AND SMOKE-DEVELOPED INDEXES SHALL NOT EXCEED 25/50. SEAL EXPOSED ENDS OF FIBERGLASS INSULATION WITH ADHESIVE MASTIC. PROVIDE INSULATION 1/4" LARGER ON PIPE WITH HEAT TRACING.

6 PIPE INSULATION DETAIL
SCALE: NONE

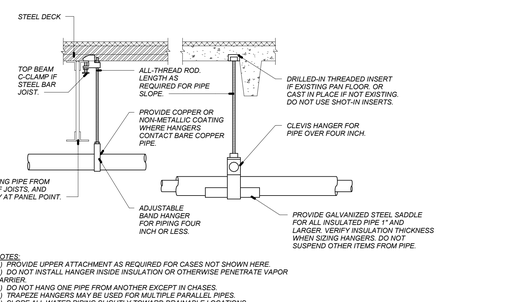

NOTES:
1.) PROVIDE UPPER ATTACHMENT AS REQUIRED FOR CASES NOT SHOWN HERE.
2.) DO NOT INSTALL HANGER INSIDE INSULATION OR OTHERWISE PENETRATE VAPOR BARRIER.
3.) DO NOT HANG ONE PIPE FROM ANOTHER EXCEPT IN CHASES.
4.) TRAPEZE HANGERS MAY BE USED FOR MULTIPLE PARALLEL PIPES.
5.) SLOPE ALL WATER PIPING SLIGHTLY TOWARD DRAINABLE LOCATIONS.
6.) LOCATE HANGERS AS CLOSE AS POSSIBLE TO TURNS AND TEES OF PIPE.
7.) PROVIDE SUPPLEMENTARY STEEL STRUTS BETWEEN JOISTS IF REQUIRED.
8.) LOCATE HANGERS TO TAKE LOAD OFF OF EQUIPMENT CONNECTIONS.
9.) ANCHOR WATER PIPE AGAINST SWAYING DUE TO CHANGES IN WATER VELOCITY. CHAINS OR PERFORATED STRAP IRON OR STEEL IS NOT ACCEPTABLE.
10.) DO NOT SUSPEND PIPES FROM JOIST BRACING MEMBERS.
11.) REFER TO CODES AND SPECIFICATIONS FOR FURTHER INFORMATION. PROVIDE SEISMIC BRACING IF/AS REQUIRED BY LOCAL AUTHORITIES.

7 PIPE HANGER DETAIL
SCALE: NONE

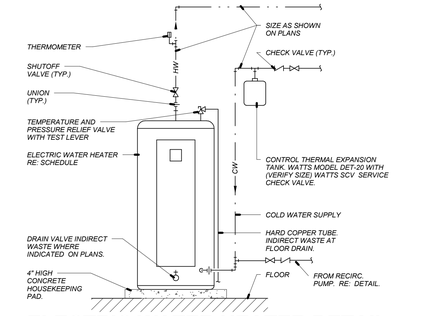

8 ELECTRIC WATER HEATER DETAIL
SCALE: NONE

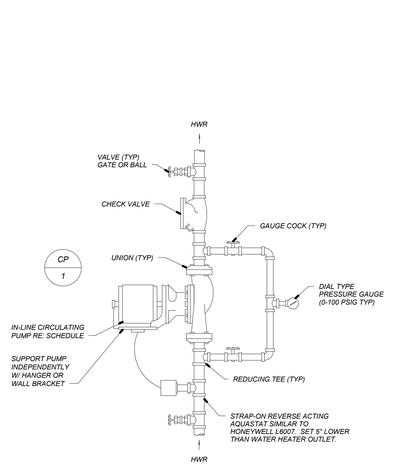

9 HOT WATER CIRCULATING PUMP DETAIL
SCALE: NO SCALE

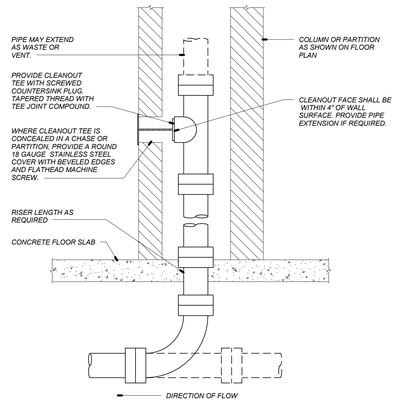

NOTES:
1.) PROVIDE WALL CLEANOUT WHERE SHOWN ON PLANS, AND ON SANITARY WASTE BRANCHES NOT SERVED WITH A FLOOR CLEANOUT. LOCATE ABOVE FIXTURE FLOOD RIM WITHIN FOUR FEET OF FLOOR. CONSULT LOCAL CODES FOR OTHER WCO REQUIREMENTS.

10 WALL CLEANOUT DETAIL
SCALE: NONE

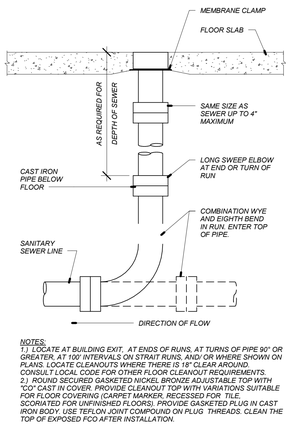

NOTES:
1.) LOCATE AT BUILDING EXIT, AT ENDS OF RUNS, AT TURNS OF PIPE 90° OR GREATER, AT 100' INTERVALS ON STRAIT RUNS, AND/ OR WHERE SHOWN ON PLANS. LOCATE CLEANOUTS WHERE THERE IS 18" CLEAR AROUND. CONSULT LOCAL CODE FOR OTHER FLOOR CLEANOUT REQUIREMENTS.
2.) ROUND SECURED GASKETED NICKEL BRONZE ADJUSTABLE TOP WITH "CO" CAST IN COVER. PROVIDE CLEANOUT TOP WITH VARIATIONS SUITABLE FOR FLOOR COVERING (CARPET MARKER, RECESSED FOR TILE, SCORIATED FOR UNFINISHED FLOORS). PROVIDE GASKETED PLUG IN CAST IRON BODY. USE TEFLON JOINT COMPOUND ON PLUG THREADS. CLEAN THE TOP OF EXPOSED FCO AFTER INSTALLATION.

11 FLOOR CLEANOUT DETAIL
SCALE: NONE

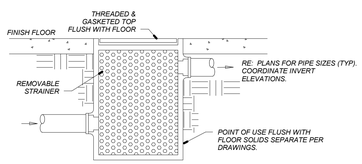

12 SOLIDS INTERCEPTOR DETAIL
SCALE: NONE

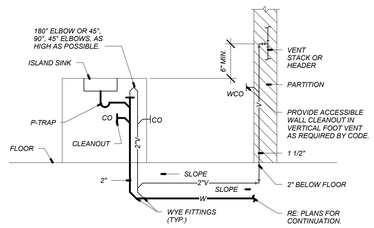

13 ISLAND SINK VENTING DETAIL
SCALE: NONE

PGAV ARCHITECTS
PECKHAM GUYTON ALBERS & VIETS, INC.
1900 W.47th Place, #200, Westwood, KS 66205
(913) 362-4000 www.PGAV.COM
Copyright ©2015

STATE OF MISSOURI DOMINICK R. RUCCELLO NUMBER E-2001004656 7/3/19 REGISTERED PROFESSIONAL ENGINEER

THE SEAL AND SIGNATURE APPLY ONLY TO THE DOCUMENT TO WHICH THEY ARE AFFIXED. THE ENGINEER ASSUMES NO RESPONSIBILITY FOR ALL OTHER BLANK SPECIFICATIONS, ESTIMATES, REPORTS, OR OTHER DOCUMENTS OR MATERIALS RELATIVE TO THE ARCHITECTURAL OR ENGINEERING PARTS OF THE ARCHITECTURAL OR ENGINEERING PROJECT.

#	DATE	DESCRIPTION

USKC EARLY CHILDHOOD EXHIBITS

SCIENCE CITY @ UNION STATION
30 W. PERSHING RD
KANSAS CITY, MO 64108

CONSTRUCTION DOCUMENTS

Original Size: 1 1/2" Drawing may have been reduced.
0" 1"

PLUMBING DETAILS

DATE:	07/03/2019
DRAWN: DVR	CHECKED: DVR
PGAV #: 53494-00	CLIENT #:
SHEET #:	P810

bgr Consulting Engineers
Ph: 816.842.2800
Fx: 816.842.4884
CERTIFICATE OF AUTHORITY # 2006007202

6/28/2019 10:34:22 AM C:\Users\Dominick\Documents\vr16) 17-nUnion Station-Mech_drcentdo.rvt

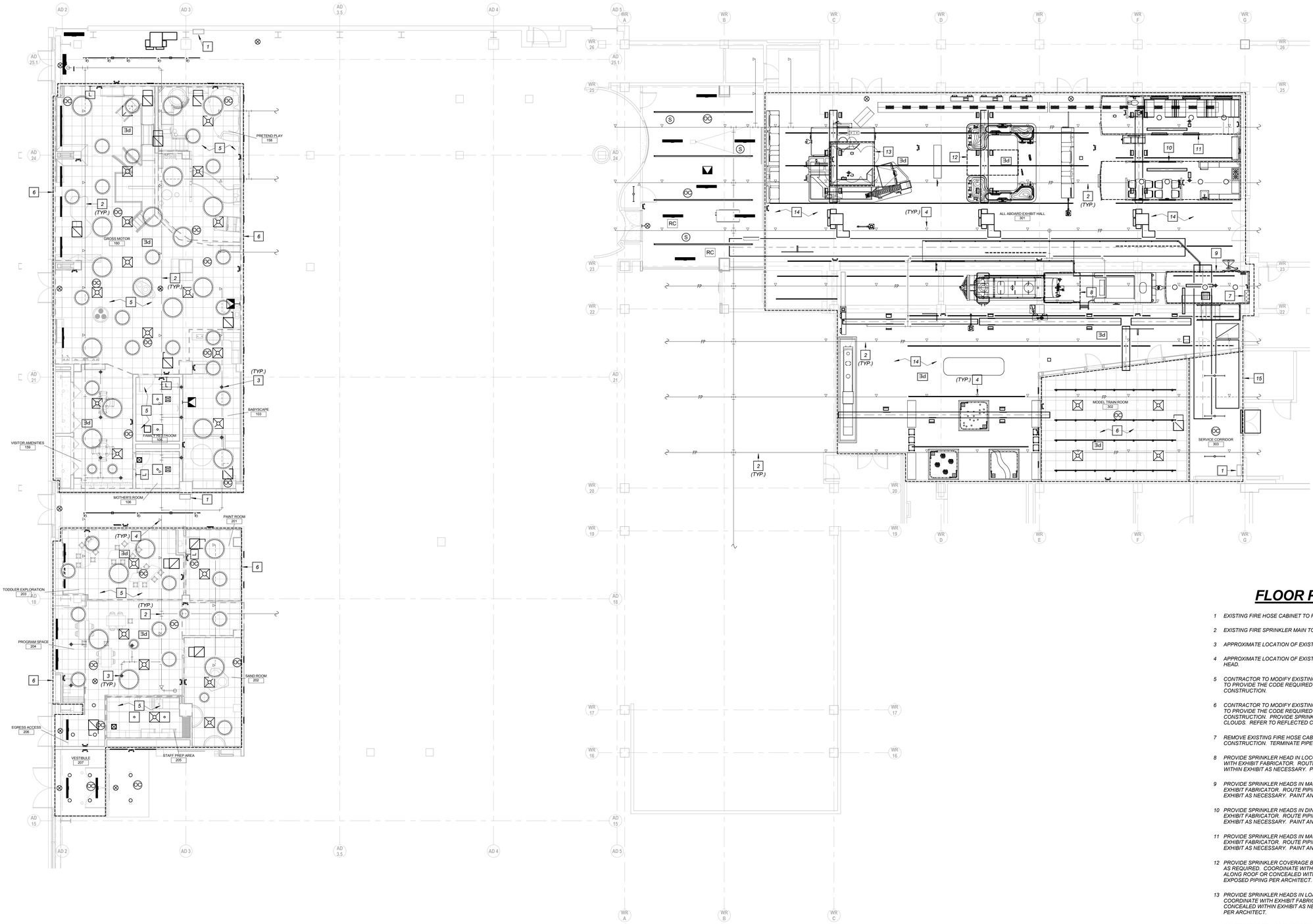

4 LEVEL 1 PLAN - FIRE PROTECTION

SCALE: 1/8" = 1'-0"

FIRE SPRINKLER USAGE SCHEDULE					
AREA TYPE	SPRINKLER TYPE (NOTES 1 & 2)	SPRINKLER RESPONSE	SPRINKLER FINISH	MANUFACTURER & MODEL	REMARKS
NO CEILINGS	UPRIGHT WITH WIRE GUARD WHERE INDICATED ON PLANS	QUICK	ROUGH BRASS	VIKING M, RELIABLE F1FR, TYCO TY-FRB, VICTAULIC V2704	NOTE 3
GYP BOARD AND ACT CEILING	CONCEALER	QUICK	WHITE	VIKING 15765 OR EQUAL	NOTE 3

REMARKS:
1.) CONTRACTOR TO VERIFY SPRINKLER REQUIREMENTS BASED ON ACTUAL ISNTALLATIN, USAGE, ARCHITECTURAL CEILING PLAN AND NFPA 13 REQUIREMENTS.
2.) CONTRACTOR TO SUBMIT ALL SPRINKLER TYPE CUT SHEETS FOR REVIEW.
3.) ALL SPRINKLERS TO BE UL LISTED.

FLOOR PLAN NOTES

1 EXISTING FIRE HOSE CABINET TO REMAIN.

2 EXISTING FIRE SPRINKLER MAIN TO REMAIN.

3 APPROXIMATE LOCATION OF EXISTING CONCEALER TYPE SPRINKLER HEAD.

4 APPROXIMATE LOCATION OF EXISTING UPRIGHT/PENDANT TYPE SPRINKLER HEAD.

5 CONTRACTOR TO MODIFY EXISTING SPRINKLER PIPING/HEADS AS NECESSARY TO PROVIDE THE CODE REQUIRED COVERAGE AS NEEDED FOR NEW CONSTRUCTION.

6 CONTRACTOR TO MODIFY EXISTING SPRINKLER PIPING/HEADS AS NECESSARY TO PROVIDE THE CODE REQUIRED COVERAGE IN AND AROUND NEW ROOM CONSTRUCTION. PROVIDE SPRINKLER HEADS IN NEW CEILINGS, BAFFLES AND CLOUDS. REFER TO REFLECTED CEILING PLANS.

7 REMOVE EXISTING FIRE HOSE CABINET AND PIPE TO ALLOW NEW CONSTRUCTION. TERMINATE PIPE AS REQUIRED.

8 PROVIDE SPRINKLER HEAD IN LOCOMOTIVE CAB AS REQUIRED. COORDINATE WITH EXHIBIT FABRICATOR. ROUTE PIPING ALONG ROOF OR CONCEALED WITHIN EXHIBIT AS NECESSARY. PAINT ANY EXPOSED PIPING PER ARCHITECT.

9 PROVIDE SPRINKLER HEADS IN MAIL CAR AS REQUIRED. COORDINATE WITH EXHIBIT FABRICATOR. ROUTE PIPING ALONG ROOF OR CONCEALED WITHIN EXHIBIT AS NECESSARY. PAINT ANY EXPOSED PIPING PER ARCHITECT.

10 PROVIDE SPRINKLER HEADS IN DINING CAR AS REQUIRED. COORDINATE WITH EXHIBIT FABRICATOR. ROUTE PIPING ALONG ROOF OR CONCEALED WITHIN EXHIBIT AS NECESSARY. PAINT ANY EXPOSED PIPING PER ARCHITECT.

11 PROVIDE SPRINKLER HEADS IN MAIL CAR AS REQUIRED. COORDINATE WITH EXHIBIT FABRICATOR. ROUTE PIPING ALONG ROOF OR CONCEALED WITHIN EXHIBIT AS NECESSARY. PAINT ANY EXPOSED PIPING PER ARCHITECT.

12 PROVIDE SPRINKLER COVERAGE BELOW SUSPENDED SHIPPING CONTAINER AS REQUIRED. COORDINATE WITH EXHIBIT FABRICATOR. ROUTE PIPING ALONG ROOF OR CONCEALED WITHIN EXHIBIT AS NECESSARY. PAINT ANY EXPOSED PIPING PER ARCHITECT.

13 PROVIDE SPRINKLER HEADS IN LOAD IT UP BALL ROOM AS REQUIRED. COORDINATE WITH EXHIBIT FABRICATOR. ROUTE PIPING ALONG ROOF OR CONCEALED WITHIN EXHIBIT AS NECESSARY. PAINT ANY EXPOSED PIPING PER ARCHITECT.

14 CONTRACTOR TO MODIFY EXISTING SPRINKLER PIPING/HEADS AS NECESSARY TO PROVIDE THE CODE REQUIRED COVERAGE AS NEEDED FOR NEW EXHIBIT INSTALLATION AND DUCTWORK.

15 CONTRACTOR TO MODIFY EXISTING SPRINKLER PIPING/HEADS AS NECESSARY TO PROVIDE THE CODE REQUIRED COVERAGE IN AND AROUND NEW ROOM CONSTRUCTION. PROVIDE SPRINKLER HEADS AS NEEDED TO ACCOMMODATE INSTALLATION OF NEW EXPOSED DUCTWORK.

NEW EXPOSED PIPING IN RAIL CARS

EXPOSED PIPING, ACCESSORIES, HANGERS, ETC. SHALL BE PAINTED TO MATCH. PIPING SHALL BE INSTALLED PARALLEL TO ADJACENT BUILDING ELEMENTS. CONTRACTOR TO HAVE ONSITE MEETING WITH ARCHITECT TO DISCUSS PIPE ROUTING PRIOR TO SUBMITTING SHOP DRAWINGS. OPPORTUNITIES FOR PENETRATING THROUGH RAIL CARS.

FIRE PROTECTION DESIGN

PROVIDE WET PIPE AUTOMATIC SPRINKLERS THROUGHOUT REMODELED AREAS. CONTRACTOR IS RESPONSIBLE FOR A DESIGN THAT MEETS THE GUIDELINES SET FORTH BY OWNER'S INSURANCE COMPANY AND NFPA. RE: FIRE PROTECTION DESIGN CRITERIA. COORDINATE WORK WITH ALL OTHER TRADES AND ARCHITECTURAL DRAWINGS.

NOTE:
CONTRACTOR SHALL MODIFY CLASSIFICATION OF AREA SPECIFIED IF MORE STRINGENT SPRINKLER COVERAGE IS SPECIFIED BY NFPA AND APPLICABLE CODES ON OWNERS INSURANCE.

bgr Consulting Engineers
Ph: 816.842.2800
Fx: 816.842.4584
CERTIFICATE OF AUTHORITY
2006007202

PGAV ARCHITECTS
PECKHAM GUYTON ALBERS & VIETS, INC.
1900 W.47th Place, #200, Westwood, KS 66205
(913) 362-4500 www.PGAV.COM

Copyright ©2015

STATE OF MISSOURI
DOMINICK R. VIVIANO
NUMBER E-2001004656
7/3/19
REGISTERED PROFESSIONAL ENGINEER

THE SEAL AND SIGNATURE APPLY ONLY TO THE DOCUMENT TO WHICH THEY ARE AFFIXED. THE ENGINEER ASSUMES NO RESPONSIBILITY FOR ALL OTHER PLANS, SPECIFICATIONS, ESTIMATES, REPORTS, OR OTHER DOCUMENTS OR INSTRUMENTS RELATIVE TO THE PROJECT WHICH DO NOT BEAR HIS SEAL AND PARTS OF THE ARCHITECTURAL OR ENGINEERING PROCESS.

#	DATE	DESCRIPTION

USKC EARLY CHILDHOOD EXHIBITS

SCIENCE CITY @ UNION STATION
30 W. PERSHING RD
KANSAS CITY, MO 64108

CONSTRUCTION DOCUMENTS

Original Size: 1 1/2" Drawing may have been reduced.
0" 1"

FIRE PROTECTION PLAN

DATE:	07/03/2019
DRAWN: DVR	CHECKED: DVR
PGAV # 53494-00	CLIENT #
SHEET #:	FP310

6/28/2019 10:32:53 AM C:\Users\Dominick\Documents\V-16 17.x\Union Station Mech_dvivriano.rvt

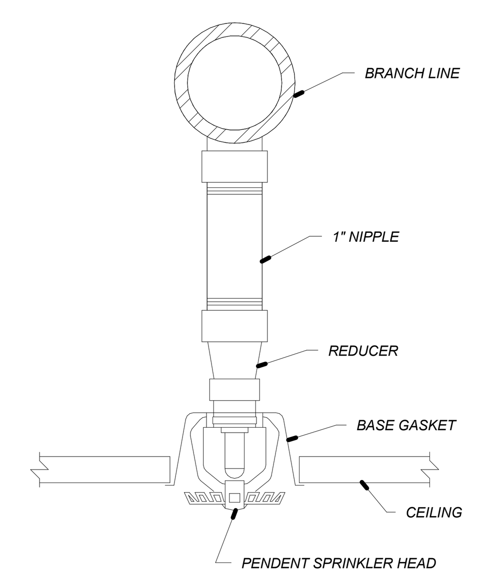

1 RECESSED SPRINKLER HEAD DETAIL
SCALE: NO SCALE

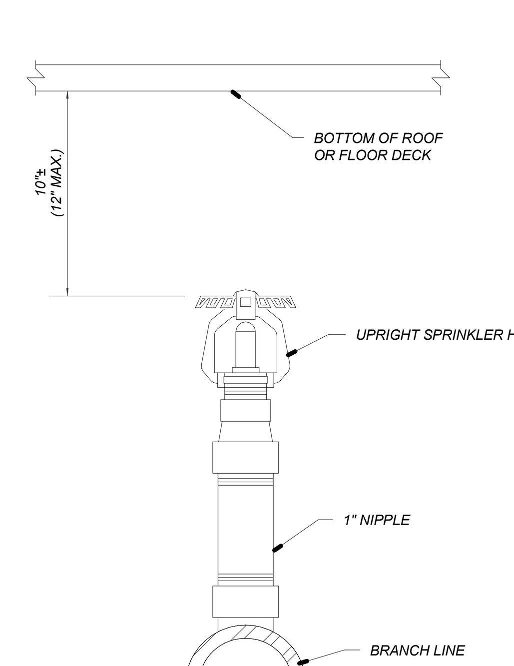

3 UPRIGHT SPRINKLER HEAD DETAIL
SCALE: NO SCALE

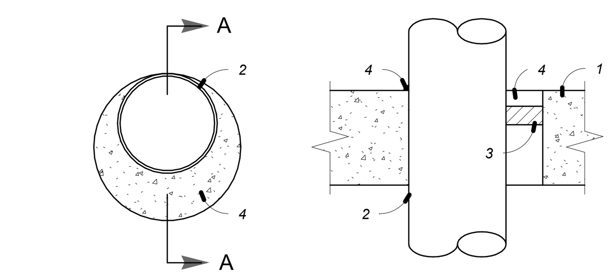

SECTION A-A

SYSTEM NO. 49
F RATINGS - 2 AND 3 HR.
(SEE ITEM 2A) T RATING - O HR.

1.) FLOOR OR WALL ASSEMBLY - MINIMUM 4 1/2" THICK LIGHTWEIGHT OR NORMAL WEIGHT (100-150 PCF) CONCRETE. WALL ASSEMBLY MAY ALSO BE CONSTRUCTED OF ANY UL CLASSIFIED CONCRETE BLOCKS. MAXIMUM DIAMETER OF CIRCULAR THROUGH OPENING IS 22 1/2".
SEE CONCRETE BLOCK (CAZT) CATEGORY IN FIRE RESISTANCE DIRECTORY FOR NAMES OF MANUFACTURERS.

1A.) STEEL SLEEVE - (OPTIONAL, NOT SHOWN) - NOMINAL 12" DIAMETER (OR SMALLER) SCHEDULE 40 (OR HEAVIER) STEEL PIPE SLEEVE CAST INTO CONCRETE FLOOR OR WALL. SLEEVE TO BE FLUSH WITH OR PROJECT MAX 2" FROM TOP SURFACE OF FLOOR OR FROM BOTH SURFACES OF WALL.

2.) PIPE OR CONDUIT - NOMINAL 20" DIAMETER (OR SMALLER) SCHEDULE 10S (OR HEAVIER) STEEL PIPE, NOMINAL 6" DIAMETER (OR SMALLER) RIGID STEEL CONDUIT, NOMINAL 6" DIAMETER (OR SMALLER) TYPE L (OR HEAVIER) COPPER TUBE, NOMINAL 4" DIAMETER. (OR SMALLER) CAST IRON PIPE OR NOMINAL. 4" DIAMETER. (OR SMALLER) STEEL EMT. MAXIMUM ONE PIPE OR CONDUIT PER THROUGH OPENING. MAXIMUM ANNULAR SPACE BETWEEN PIPE OR CONDUIT AND EDGE OF
THROUGH OPENING IS ZERO IN (POINT CONTACT). PIPE OR CONDUIT TO BE RIGIDLY SUPPORTED ON BOTH SIDES OF FLOOR OR WALL ASSEMBLY.

2A.) STEEL VENT DUCT - (NOT SHOWN) - AS AN ALTERNATE TO THE PIPE OR CONDUIT, NOMINAL 4" DIAMETER (OR SMALLER) NO. 28 GAUGE (OR HEAVIER) GALVANIZED STEEL VENT DUCT MAY BE USED IN THROUGH OPENINGS OF FLOOR ASSEMBLIES PROVIDED MAXIMUM ANNULAR SPACE DOES NOT EXCEED 7/8". WHEN STEEL VENT DUCT IS USED, F RATING IS 2 HRS.

3.) PACKING MATERIAL - POLYETHYLENE BACKER ROD OR NOMINAL 1" THICKNESS OF TIGHTLY- PACKED CERAMIC (ALUMINA SILICA) FIBER BLANKET, MINERAL-WOOL BATT OF GLASS FIBER INSULATION MATERIAL USED AS A PERMANENT FORM. PACKING MATERIAL TO BE RECESSED FROM TOP SURFACE OF FLOOR OR FROM BOTH SURFACES OF WALL AS REQUIRED TO ACCOMMODATE THE REQUIRED THICKNESS OF CAULK FILL MATERIAL (ITEM 4). AS AN ALTERNATE WHEN MAXIMUM PIPE SIZE IS 10" DIAMETER AND WHEN MAXIMUM ANNULAR SPACE IS 1" OR LESS, A MINIMUM 1" THICKNESS OF TIGHTLY-PACKED CERAMIC FIBER BLANKET OR MINERAL-WOOL BATT PACKING MATERIAL MAY BE RECESSED MINIMUM 1/2" FROM BOTTOM SURFACE OF FLOOR OR FROM EITHER SIDE OF WALL.

4.) FILL, VOID OR CAVITY MATERIALS -CAULK- APPLIED TO FILL THE ANNULAR SPACE TO THE MINIMUM THICKNESS SHOWN IN THE FOLLOWING TABLE:*

MAXIMUM PIPE DIAMETER. (IN.)	MAXIMUM ANNULAR SPACE (IN.)	PACKING MATERIAL TYPE (a)	MINIMUM CAULK THICKNESS (IN.)
10	1	BR, CF, GF or MW	1/2 (b)
10	1	CF or MW	1/2 (C) 1
20	2 /2	BR, CF, GF or MW	(b)

(a.) BR = POLYETHYLENE BACKER ROD. CF = CERAMIC FIBER BLANKET. GF = GLASS FIBER INSULATION. MW = MINERAL-WOOL BATT.
(b.) CAULK INSTALLED FLUSH WITH TOP SURFACE OF FLOOR OR BOTH SURFACE OF WALL.
(c.) CAULK INSTALLED FLUSH WITH BOTTOM SURFACE OF FLOOR OR ONE SURFACE OF WALL.
** BEARING THE UL CLASSIFICATION MARKING*

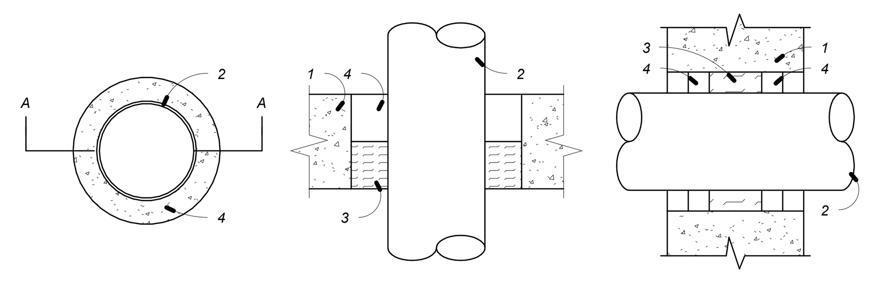

SECTION A-A
(FLOOR ASSEMBLY)

SECTION A-A
(WALL ASSEMBLY)

SYSTEM NO. CAJ1012
(FORMERLY SYSTEM NO. 129)
F RATINGS - 1 HR. T RATING - O HR.

1.) FLOOR OR WALL ASSEMBLY - MINIMUM 5" THICK REINFORCED NORMAL WEIGHT (100 - 150 PCF) CONCRETE. WALL MAY ALSO BE CONSTRUCTED OF ANY UL CLASSIFIED CONCRETE BLOCKS. MAXIMUM DIAMETER OF OPENING IS 6".*
SEE CONCRETE BLOCKS (CAZT) CATEGORY IN THE FIRE RESISTANCE DIRECTORY FOR NAMES OF MANUFACTURERS.

2.) THROUGH PENETRANTS - ONE METALLIC PIPE OR CONDUIT TO BE CENTERED WITHIN THE FIRESTOP SYSTEM. A NOMINAL ANNULAR SPACE OF 3/4" IS REQUIRED WITHIN THE FIRESTOP SYSTEM. PIPE OR CONDUIT TO BE RIGIDLY SUPPORTED ON BOTH SIDES OF FLOOR OR WALL ASSEMBLY. THE FOLLOWING TYPES AND SIZES OF METALLIC PIPES OR CONDUITS MAY BE USED:
A. STEEL PIPE - NOMINAL 4" DIAMETER (OR SMALLER) SCHEDULE 5 (OR HEAVIER) STEEL PIPE.
B. CONDUIT - NOMINAL 4" DIAMETER (OR SMALLER) ELECTRICAL METALLIC TUBING OR STEEL CONDUIT.

3.) PACKING MATERIAL - MINIMUM 3" THICKNESS OF MINIMUM 4.4 PCF MINERAL WOOL BATT INSULATION FIRMLY PACKED INTO OPENING AS A PERMANENT FORM. PACKING MATERIAL TO BE RECESSED FROM TOP SURFACE OF FLOOR AS REQUIRED TO ACCOMMODATE THE REQUIRED THICKNESS OF FILL MATERIAL. PACKING MATERIAL TO BE CENTERED IN WALL'S MID-DEPTH AND RECESSED TO ALLOW FOR INSTALLATION OF FILL MATERIAL.

4.) FILL, VOID OR CAVITY MATERIAL - SEALANT OR FOAM - MINIMUM 1/2" THICKNESS OF FILL MATERIAL APPLIED WITHIN ANNULUS, FLUSH WITH TOP SURFACE OF FLOOR. IN WALL, FILL MATERIAL TO BE APPLIED ON EACH SIDE OF PACKING MATERIAL. FOAMED SILICONE TO BE INSTALLED AS DESCRIBED IN THE MANUFACTURER'S APPLICATION INSTRUCTIONS AT A DENSITY OF 14 PCF MINIMUM TO 21 PCF MAXIMUM. THE THICKNESS OF FILL MATERIAL IS DEPENDENT UPON THE TYPE OF FILL MATERIAL AS SHOWN IN THE TABLE BELOW.*

FILL MATERIAL IDENTIFICATION	MINIMUM THICK OF FILL MATERIAL, (IN.)
TYPE FS FOAM TYPE FS SEALANT OR FS SEALANT SL	1 1/2

DOW CORNING CORP. - TYPES FS SEALANT, FS SEALANT SL (FLOOR ONLY) OR FS FOAM
** BEARING THE UL CLASSIFICATION MARKING.*

2 FIRE STOPPING DETAIL
SCALE: NONE

FIRE PROTECTION DESIGN CRITERIA

A.) THE ENTIRE FACILITY SHALL BE FULLY SPRINKLED. FIRE PROTECTION SYSTEM DESIGNED AND INSTALLED AS DESIGN BUILD. CONTRACTORS ARE RESPONSIBLE TO PROVIDE DESIGN, PERMIT DRAWINGS AND CALCULATIONS SEALED BY A PROFESSIONAL ENGINEER AND COMPLETE CONSTRUCTION. ALL WORK SHALL COMPLY WITH STATE AND LOCAL CODE REQUIREMENTS AS APPROVED AND AMENDED BY THE GOVERNING CITY, INCLUDING APPLICABLE SECTIONS OF NFPA, OSHA, BOCA, UBC, OR ANY INTERIM AMENDMENTS AT THE TIME OF THE PROPOSAL. PURCHASE ALL PERMITS ASSOCIATED WITH THE WORK. OBTAIN ALL INSPECTIONS REQUIRED BY CODE.

B.) CONTRACTOR SHALL COORDINATE WITH NEW REFLECTED CEILING PLAN, NEW DUCTWORK LAYOUT AND LIGHTING LAYOUTS. FURNISH ALL MATERIALS, LABOR, TOOLS, TRANSPORTATION, INCIDENTALS AND APPURTENANCES TO COMPLETE IN EVERY DETAIL AND LEAVE IN WORKING ORDER ALL ITEMS OF WORK REQUIRED FOR STRICT COMPLIANCE. ALL SPRINKLER LINES SHALL BE CONCEALED, AVOIDING INTERFERENCES WITH LIGHTS, DUCTS, PIPES, ETC... ALL SPRINKLER HEADS ARE TO BE CENTERED IN TILE. ALL PIPING TO BE XL WITH CAST IRON SCREWED FITTINGS.

C.) FIRE PROTECTION CONTRACTOR SHALL PREPARE DETAILED AND COORDINATED SHOP DRAWINGS SO AS TO AVOID CONFLICTS IN THE FIELD. ALL COORDINATION SHALL TAKE PLACE PRIOR TO INSTALLATION. CONTRACTOR SHALL FILE ALL DRAWINGS, PAY ALL FEES AND OBTAIN PERMITS AND CERTIFICATES OF INSPECTIONS RELATIVE TO THIS WORK. CONTRACTOR SHALL BE RESPONSIBLE FOR ALL COORDINATION WITH OTHER TRADES, ARCHITECTURAL DETAILS, STRUCTURE, CEILINGS, ETC. CONTRACTOR MUST MEET WITH ARCHITECT PRIOR TO GENERATING DRAWINGS TO DISCUSS ACCEPTABLE PIPE LOCATIONS AND ROUTES.

D.) ALL PIPING IN FINISHED AREAS (I.E. WITH CEILINGS) SHALL BE CONCEALED WITHIN WALLS OR CEILING PLENUMS.

E.) HYDROSTATIC TEST SHALL BE IN ACCORDANCE WITH NFPA-13, SECTION 8-2.2 HYDROSTATIC TEST.

F.) COMPLETE PLANS AND SPECIFICATIONS FOR AUTOMATIC SPRINKLERS AND OTHER FIRE-PROTECTION SYSTEMS SHALL BE SUBMITTED TO FIRE AND LIFE SAFETY UNDERWRITER FOR REVIEW AND APPROVAL PRIOR TO INSTALLATION.

G.) SPRINKLER CONTRACTOR SHALL COORDINATE HEAD AND PIPING LOCATIONS WITH ALL SUB-CONTRACTORS. INSTALL WITH EQUAL SPACING IN TILES AND PER NFPA 13.

H.) INCLUDE ANY INCIDENTAL APPARATUS, APPLIANCES, MATERIAL LABOR AND SERVICES NECESSARY TO MAKE NEW WORK COMPLETE IN ALL RESPECTS AND FULLY READY FOR OPERATION.

I.) MAKE SUCH OFFSETS AND DEVIATIONS FROM WORK SHOWN ON THE DRAWINGS, AS MAY BE NECESSARY TO FIT THE ACTUAL SPACE CONDITIONS.

J.) INSTALLER SHALL NOT CUT ANY STRUCTURAL MEMBERS WITHOUT FIRST SECURING WRITTEN APPROVAL FROM THE ARCHITECT.

K.) CONTRACTOR SHALL ARRANGE FOR, OBTAIN AND BEAR THE COST OF NECESSARY PERMITS, BONDS AND FEES.

L.) ALL MATERIALS SHALL BE U.L. LISTED AND BEAR THE U.L. LABEL.

M.) PENETRATION THROUGH FIRE RATED ASSEMBLIES, PENETRATIONS FOR PIPES, CONDUITS OR OTHER PURPOSES THROUGH ASSEMBLIES (FLOORS, ROOF, WALLS, PARTITIONS, ETC.) WITH A REQUIRED FIRE STOP MATERIAL. FIRE STOP MATERIAL SHALL BE U.L. LISTED AND INSTALLED IN STRICT ACCORDANCE WITH THE MANUFACTURER'S REQUIREMENTS TO MEET OR EXCEED THE FIRE RATING OF THE PENETRATED ASSEMBLY.

N.) PROVIDE DEFLECTOR ON ELECTRICAL EQUIPMENT TO PREVENT WETTING PANELS. SPRINKLER PIPING SHALL NOT BE INSTALLED DIRECTLY ABOVE ELECTRICAL PANELS.

O.) PROVIDE FLUSHING CONNECTION AT END OF SPRINKLER SYSTEM IN ACCESSIBLE LOCATION. ALL SPRINKLER PIPING THAT REQUIRED A CHANGE IN ELEVATIONS DUE TO COORDINATION ROUTING OF PIPING SHALL HAVE A FLUSH CONNECTION AT ALL LOWER ELEVATION. THE SPRINKLER SYSTEM SHALL BE INSTALLED WITH COMPLETE DRAINABLE SYSTEM.

P.) WHEN CONFLICTS OCCUR IN SPECIFICATIONS OR IN THE DRAWINGS, OR BETWEEN EITHER, THE ITEMS OF GREATER QUALITY OR HIGHER COST SHALL BE PROVIDED.

Q.) THE INSTALLER SHALL VISIT THE JOB SITE, INSPECT ALL EXISTING CONDITIONS AFFECTING THE WORK. SUBMISSION OF HIS/HER PROPOSAL SHALL BE CONSTRUED AS INDICATING SUCH KNOWLEDGE. NO ADDITIONAL PAYMENT WILL BE MADE ON CLAIMS THAT ARISE FROM THE CONTRACTOR'S FAILURE TO COMPLY WITH THIS REQUIREMENT.

R.) THE CONTRACTORS IS RESPONSIBLE FOR CHECKING FIELD CONDITIONS PRIOR TO BIDDING AND REPORT ANY PROBLEMS/CONFLICTS TO THE ENGINEER WITHIN 2 DAYS OF DISCOVERY. ANY CHANGES RESULTING FROM CONDITIONS ARISING IN THE FIELD WHICH WERE NOT BROUGHT TO THE ENGINEER'S ATTENTION ARE TO BE MADE BY THIS CONTRACTOR WITH NO ADDITIONAL COST TO THE OWNER.

S.) UPON COMPLETION OF THE WORK UNDER THIS CONTRACT, THE CONTRACTOR SHALL REMOVE ALL TOOLS, APPLIANCES, SURPLUS MATERIALS AND SCRAP.

T.) CONTRACTORS AND SUBCONTRACTORS SHALL CAREFULLY REVIEW THE CONSTRUCTION DOCUMENTS. INFORMATION REGARDING THE COMPLETE WORK IS DISPERSED THROUGHOUT THE DOCUMENT SET AND CAN NOT BE ACCURATELY DETERMINED WITHOUT REFERENCE TO THE COMPLETE DOCUMENT SET.

U.) COORDINATE WITH THE WORK OF OTHER TRADES. PROVIDE RISES AND DROPS AS REQUIRED FOR FIELD INSTALLATION AND TRADE COORDINATION. NOTIFY ARCHITECT OF ANY DISCREPANCIES BEFORE STARTING WORK.

V.) CONTRACTOR SHALL CAULK/SEAL EVERY WALL PENETRATION AS SPECIFIED BY ARCHITECT OR ENGINEER. WHERE WALL IS SMOKE/FIRE RATED CONTRACTOR SHALL PROVIDE REQUIRED U.L. FIRE STOP. IF THE ARCHITECTURAL AND MECHANICAL SPECIFICATIONS REGARDING CAULKING/SEALING ARE NOT CONSISTENT CONTRACTOR SHALL USE THE MOST STRINGENT.

W.) INTENT. BY SUBMITTING A BID THE CONTRACTOR ACCEPTS RESPONSIBILITY TO PROVIDE A COMPLETE DESIGN BUILD FIRE SPRINKLER SYSTEM BASED ON THE ENTIRE SET OF DRAWINGS AND ALL CODES. CONTRACTOR'S DRAWINGS SHALL BE STAMPED BY AN ENGINEER AND SUBMITTED TO THE CITY FOR REVIEW AS A PART OF THIS PERMIT.

X.) THE CONTRACT DRAWINGS DO NOT NECESSARILY INDICATE EVERY REQUIRED ITEM. AS SUCH THE CONTRACTOR SHALL INCLUDE AS A PART OF HIS BID ALL WORK, MATERIALS, LABOR, EQUIPMENT, TOOLS, INSURANCE, TAXES, SERVICES, APPURTANCES, ETC. TO MAKE A COMPLETE OPERATIONAL SYSTEM. CONTRACTOR SHALL ASSUME FULL RESPONSIBILITY FOR ALL OBLIGATIONS ASSOCIATED WITH COMPLETION OF WORK AS PROVIDED BY THE CONTRACT DOCUMENTS.

Y.) QUESTIONS. ANY QUESTIONS THAT ARISE IN THE FIELD OR UPON REVIEW OF THE CONTRACT DRAWINGS THE CONTRACTOR SHALL SUBMIT THE QUESTION IN WRITING TO THE ARCHITECT/ENGINEER FOR CLARIFICATION. A PHONE CALL IS PERMISSIBLE BUT MUST BE FOLLOWED BY WITH THE WRITTEN SUBMISSION.

Z.) DOCUMENTS. CONTRACTOR SHALL READ AND BE FAMILIAR WITH THE REQUIREMENTS WITHIN ALL DRAWINGS AND SPECIFICATIONS. HE SHALL EXAMINE THE ARCHITECTURAL, STRUCTURAL, MECHANICAL AND ELECTRICAL DRAWINGS AND SPECIFICATIONS TO FAMILIARIZE HIMSELF WITH THE TYPE OF CONSTRUCTION, MATERIALS, AND EQUIPMENT TO BE USED FOR ALL WORK AND HOW IT WILL AFFECT THE INSTALLATION OF HIS CONTRACT. BY THE ACT OF SUBMITTING A BID, THE CONTRACTOR WILL BE DEEMED TO HAVE MADE SUCH EXAMINATION, TO HAVE ACCEPTED SUCH CONDITIONS, TO HAVE MADE ALLOWANCE THEREFOR, AND INCLUDED ALL COSTS IN HIS PROPOSAL. FAILURE TO DETERMINE EXISTING CONDITIONS WILL NOT BE CONSIDERED A BASIS FOR THE GRANTING OF ADDITIONAL COMPENSATION.

AA.) SCHEDULE. COORDINATE WORK WITH THAT OF OTHER TRADES SO THAT THE VARIOUS COMPONENTS OF THE SYSTEMS WILL BE INSTALLED AT THE PROPER TIME, WILL FIT THE AVAILABLE SPACE, AND WILL ALLOW PROPER SERVICE ACCESS TO THOSE ITEMS REQUIRING MAINTENANCE. COMPONENTS WHICH ARE INSTALLED WITHOUT REGARD TO THE ABOVE SHALL BE RELOCATED AT NO ADDITIONAL COST TO THE OWNER.

BB.) DIMENSIONS. FIGURED DIMENSIONS SHALL BE TAKEN IN PREFERENCE TO SCALE DIMENSIONS. CONTRACTOR SHALL TAKE HIS OWN MEASUREMENTS AT THE BUILDING, AS VARIATIONS MAY OCCUR. CONTRACTOR WILL BE HELD RESPONSIBLE FOR ERRORS THAT COULD OF HAVE BEEN AVOIDED BY PROPER CHECKING AND INSPECTION.

FIRE PROTECTION DESIGN CRITERIA

CC.) TRIM. PROVIDE MATERIALS WITH TRIM THAT WILL PROPERLY FIT THE TYPES OF CEILING, WALL OR FLOOR FINISHES ACTUALLY INSTALLED. MODEL NUMBERS LISTED IN THE SPECIFICATION OR SHOWN ON THE DRAWINGS ARE NOT INTENDED TO DESIGNATE THE REQUIRED TRIM.

DD.) PROTECTION. STORE AND PROTECT FROM DAMAGE EQUIPMENT AND MATERIALS DELIVERED TO JOB SITE. COVER WITH WATERPROOF, TEAR RESISTANT, HEAVY TARP OR POLYETHYLENE PLASTIC AS REQUIRED TO PROTECT FROM PLASTER, DIRT, PAINT, WATER OR PHYSICAL DAMAGE. EQUIPMENT AND MATERIAL THAT HAS DAMAGED BY CONSTRUCTION ACTIVITIES WILL BE REJECTED AND THE CONTRACTOR IS OBLIGATED TO FURNISH NEW EQUIPMENT AND MATERIAL OF A LIKE KIND. PLUG OR CAP OPEN ENDS OF DUCTWORK AND PIPING SYSTEMS WHILE STORED AND INSTALLED DURING CONSTRUCTION WHEN NOT IN USE TO PREVENT THE ENTRANCE OF DEBRIS INTO THE SYSTEMS. KEEP THE MANUFACTURER-PROVIDED PROTECTIVE COVERINGS ON FLOOR DRAINS, FLOOR SINKS AND TRENCH DRAINS DURING CONSTRUCTION. REMOVE COVERINGS AT THE TERMINATION OF THE WORK AND POLISH EXPOSED SURFACES.

EE.) LICENSES/CODES. THE CONTRACTOR SHALL BE LICENSED TO PERFORM WORK IN THE MUNICIPALITY IN WHICH THE PROJECT IS LOCATED. ALL PRODUCTS AND TYPES OF CONSTRUCTION SHALL MEET OR EXCEED THE LATEST EDITION OF APPLICABLE STANDARDS OF MANUFACTURER, TESTING, PERFORMANCE AND INSTALLATION. WORK PERFORMED UNDER THIS CONTRACT SHALL, AT A MINIMUM, BE IN CONFORMANCE WITH APPLICABLE NATIONAL, STATE AND LOCAL CODES HAVE JURISDICTION. EQUIPMENT FURNISHED AND ASSOCIATED INSTALLATION WORK PERFORMED UNDER THIS CONTRACT SHALL BE IN STRICT COMPLIANCE WITH CURRENT APPLICABLE CODES ADOPTED BY THE LOCAL AHJ INCLUDING ANY AMENDMENTS AND STANDARDS AS SET FORTH BY THE NATIONAL FIRE PROTECTION ASSOCIATION (NFPA), UNDERWRITERS LABORATORIES (UL), OCCUPATIONAL SAFETY AND HEALTH ADMINISTRATION (OSHA), AMERICAN SOCIETY OF MECHANICAL ENGINEERS (ASME), AMERICAN SOCIETY OF HEATING, REFRIGERATION AND AIR CONDITIONING ENGINEERS (ASHRAE), AMERICAN NATIONAL STANDARDS INSTITUTE (ANSI), AMERICAN SOCIETY OF TESTING MATERIALS (ASTM) AND OTHER NATIONAL STANDARDS AND CODES WHERE APPLICABLE. WHERE THE CONTRACT DOCUMENTS EXCEEDS THE REQUIREMENTS OF THE REFERENCED CODES, STANDARDS, ETC., THE CONTRACT DOCUMENTS SHALL TAKE PRECEDENCE. WHERE REQUIRED, OBTAIN, PAY FOR AND FURNISH CERTIFICATES OF INSPECTION TO THE OWNER. THE CONTRACTOR WILL BE HELD RESPONSIBLE FOR ANY VIOLATION OF THE LAW. MAINTAIN NECESSARY SIGNAL LIGHTS AND GUARDS FOR THE SAFETY OF THE PUBLIC. THE WORK SHALL COMPLY WITH THE EDITION OF THE APPLICABLE STANDARDS, REGULATIONS AND CODES CURRENTLY IN FORCE OF ALL STATE AND LOCATION AUTHORITIES HAVING JURISDICTION. WHERE QUANTITIES, SIZES, OR OTHER REQUIREMENTS INDICATED ON THE DRAWINGS OR HEREIN SPECIFIED ARE IN EXCESS OF THE STANDARD OR CODE REQUIREMENTS, THE SPECIFICATIONS AND/OR DRAWINGS SHALL GOVERN. IN THE ABSENCE OF OTHER APPLICABLE LOCAL CODES, ACCEPTABLE TO THE ARCHITECT/ENGINEER, AND UNIFORM PLUMBING AND MECHANICAL CODES SHALL APPLY TO THIS WORK.

FF.) CEILINGS. CONTRACTOR SHALL COORDINATE SPRINKLER TYPES WITH ARCHITECTURAL REFLECTED CEILING PLANS.

GG.) SPRINKLER AREAS THAT ARE NOT PROVIDED WITH HEAT AND THEREFORE, SUSCEPTIBLE TO FREEZING SHALL UTILIZE A DRY TYPE SYSTEM.

bgr Consulting Engineers
Ph: 816.842.2800
Fx: 816.842.4884
CERTIFICATE OF AUTHORITY
2006007202

PGAV ARCHITECTS
PECKHAM GUYTON ALBERS & VIETS, INC.
1900 W.47th Place, #300, Westwood, KS 66205
(913) 362-6500 www.PGAV.COM
Copyright ©2015

STATE OF MISSOURI
DOMINICK V. RUCERETO
NUMBER E-2001004656
7/3/19
REGISTERED PROFESSIONAL ENGINEER

THE SEAL AND SIGNATURE APPLY ONLY TO THE DOCUMENT TO WHICH THEY ARE AFFIXED, AND EXPRESSLY DISCLAIM ANY RESPONSIBILITY FOR ALL OTHER PLANS, SPECIFICATIONS, ESTIMATES, REPORTS, OR OTHER DOCUMENTS OR INSTRUMENTS RELATING TO OR INTENDED TO BE USED FOR ANY PART OR PARTS OF THE ARCHITECTURAL OR ENGINEERING PROJECT.

#	DATE	DESCRIPTION

USKC EARLY CHILDHOOD EXHIBITS

SCIENCE CITY @ UNION STATION
30 W. PERHSING RD
KANSAS CITY, MO 64108

CONSTRUCTION DOCUMENTS

Original Size: 1 1/2" Drawing may have been reduced.
0" 1"

FIRE PROTECTION DETAILS

DATE: 07/03/2019
DRAWN: DVR CHECKED: DVR
PGAV #: 53494-00 CLIENT #:
SHEET #:

FP810

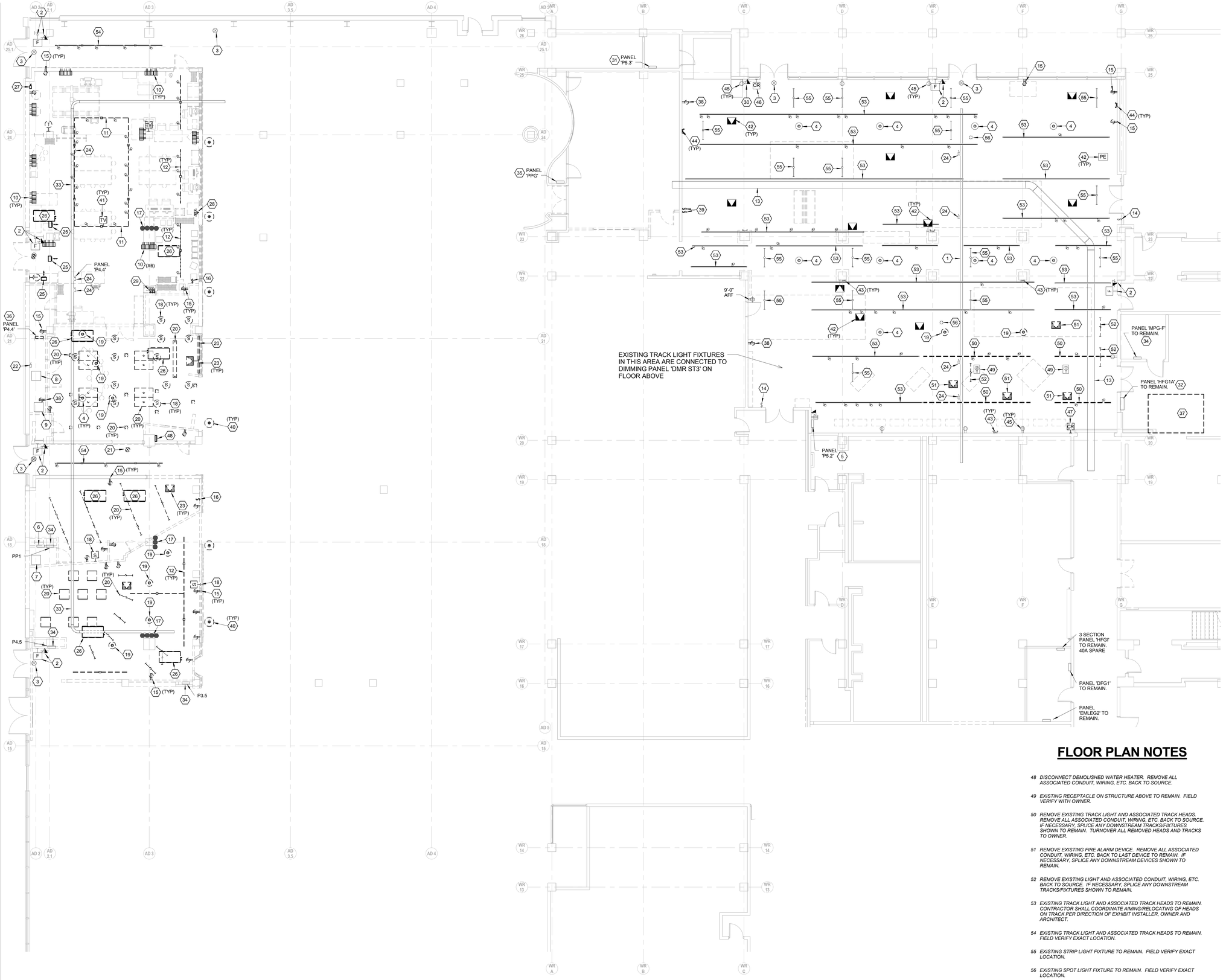

1 LEVEL 1 FLOOR PLAN - DEMOLITION

SCALE: 1/8" = 1'-0"

FLOOR PLAN NOTES

1 EXISTING 400A 120/208V PLUG-IN BUSWAY TO REMAIN.

2 EXISTING FIRE ALARM COMMUNICATION DEVICE AND PULL STATION TO REMAIN.

3 EXISTING EXIT SIGN TO REMAIN. FIELD VERIFY EXACT LOCATION.

4 EXISTING FLOOR OUTLET TO REMAIN. FIELD VERIFY EXACT LOCATION.

5 EXISTING PANEL P5.2 TO REMAIN. (100A, 120/208V 3PH, 24 POLE)

6 EXISTING WATT STOPPER LIGHTING CONTROL PANEL TO REMAIN.

7 EXISTING RACK FOR TOUCH SCREEN ABOVE TO REMAIN.

8 EXISTING STRAND 120/208 CP80SV LIGHTING CONTROL CABINET WITH 18 SPACES TO REMAIN.

9 EXISTING RACK FOR PUBLIC ADDRESS SYSTEM TO REMAIN.

10 REMOVE EXISTING MULTI-GANG BOX WITH RECEPTACLES, TWIST LOCKS, ETC. REMOVE ALL ASSOCIATED CONDUIT, WIRING, ETC. BACK TO SOURCE. IF NECESSARY, SPLICE ANY DOWNSTREAM DEVICES SHOWN TO REMAIN.

11 REMOVE EXISTING LIGHT TRUSS, RECEPTACLES, LIGHTS, ETC. REMOVE ALL ASSOCIATED CONDUIT, WIRING, ETC. BACK TO SOURCE. IF NECESSARY, SPLICE ANY DOWNSTREAM DEVICES SHOWN TO REMAIN.

12 REMOVE EXISTING TRACK LIGHT AND HEADS. REMOVE ALL ASSOCIATED CONDUIT, WIRING, ETC. BACK TO SOURCE. IF NECESSARY, SPLICE ANY DOWNSTREAM DEVICES SHOWN TO REMAIN.

13 EXISTING CABLETRAY TO REMAIN.

14 EXISTING PUSH TO EXIT BUTTON TO REMAIN.

15 REMOVE EXISTING RECEPTACLE. REMOVE ALL ASSOCIATED CONDUIT, WIRING, ETC. BACK TO SOURCE. IF NECESSARY, SPLICE ANY DOWNSTREAM DEVICES SHOWN TO REMAIN.

16 REMOVE EXISTING LIGHT CONTROLLER. REMOVE ALL ASSOCIATED CONDUIT, WIRING, ETC. BACK TO SOURCE.

17 REMOVE EXISTING PULL BOX AND ASSOCIATED CONDUITS TO BELOW FLOOR, CAP AND REPAIR FLOOR AS INSTRUCTED BY ARCHITECT.

18 REMOVE EXISTING SPEAKER. REMOVE ALL ASSOCIATED CONDUIT, WIRING, ETC. BACK TO SOURCE.

19 REMOVE EXISTING FLOOR OUTLET. REMOVE ALL ASSOCIATED CONDUIT, WIRING, ETC. BACK TO SOURCE. IF NECESSARY, SPLICE ANY DOWNSTREAM DEVICES SHOWN TO REMAIN. PATCH AND REPAIR FLOOR AS INSTRUCTED BY ARCHITECT.

20 REMOVE EXISTING LIGHT FIXTURE. REMOVE ALL ASSOCIATED CONDUIT, WIRING, ETC. BACK TO SOURCE. IF NECESSARY, SPLICE ANY DOWNSTREAM DEVICES SHOWN TO REMAIN.

21 REMOVE EXISTING EXIT SIGN. REMOVE ALL ASSOCIATED CONDUIT, WIRING, ETC. BACK TO SOURCE. IF NECESSARY, SPLICE ANY DOWNSTREAM DEVICES SHOWN TO REMAIN.

22 EXISTING 200A DISCONNECT.

23 REMOVE EXISTING FIRE ALARM DEVICE AND ALL ASSOCIATED WIRING.

24 EXISTING PLUG-IN FUSED DISCONNECT ON BUSWAY TO REMAIN. USE OF ONE THE EXISTING DISCONNECTS IS ALLOWED FOR NEW POWER CONNECTION IF IT IS FOUND TO BE A SPARE. RE: POWER PLAN. FIELD VERIFY WITH OWNER.

25 DISCONNECT DEMOLISHED UNIT HEATER. REMOVE ALL ASSOCIATED CONDUIT, WIRING, ETC. BACK TO SOURCE.

26 DISCONNECT DEMOLISHED MECHANICAL UNIT. REMOVE ALL ASSOCIATED CONDUIT, WIRING, ETC. BACK TO SOURCE.

27 REMOVE EXISTING 25A DISCONNECT. REMOVE ALL ASSOCIATED CONDUIT, WIRING, ETC. BACK TO SOURCE.

28 REMOVE EXISTING DATA DEVICE AND ALL ASSOCIATED CONDUIT, WIRING, ETC. BACK TO SOURCE.

29 REMOVE EXISTING LIGHT SWITCH. REMOVE ALL ASSOCIATED CONDUIT, WIRING, ETC. BACK TO SOURCE.

30 EXISTING FIRE ALARM COMMUNICATION DEVICE TO REMAIN.

31 EXISTING PANEL P5.3 TO REMAIN. (100A, 120/208V 3PH, 24 POLE)

32 EXISTING PANEL HFG1A TO REMAIN. (400A, 480/277V 3PH, 24 POLE. 300A BREAKER POWERS AHU-40 ELECTRIC HEAT AND 50A BREAKER POWER AHU-40 FAN, 2 60A BREAKERS POWER UNIT HEATERS). REMOVE EXISTING 300A BREAKER FOR AHU-40 ELECTRIC HEATER AND REPLACE. MAINTAIN CIRCUITRY AND WIRING FOR NEW HEATER BREAKER. REMOVE EXISTING 50A BREAKER FOR AHU-40 SUPPLY FAN AND REMOVE ALL ASSOCIATED WIRE AND CONDUITS. SPACE TO BE UTILIZED FOR NEW BREAKER TO POWER NEW AHU-50 SUPPLY FAN.

33 EXISTING BUSWAY TO REMAIN.

34 EXISTING ELECTRICAL PANEL TO REMAIN.

35 EXISTING PANEL PPG TO REMAIN. (125A, 120/208V 3PH, 42 POLE WITH 100A MCB) AVAILABLE SPACES 25-42.

36 RELOCATE EXISTING ELECTRICAL PANEL.

37 DISCONNECT POWER FROM DEMOLISHED MECHANICAL UNIT AHU-40. MAINTAIN ELECTRIC HEATER CIRCUITRY TO POWER HEATER IN NEW UNIT. MAINTAIN 120V CIRCUITRY SERVING EXISTING CONTROLS FOR CONNECTION TO NEW UNIT. REMOVE 480V CIRCUITRY POWERING UNIT SUPPLY FAN.

38 RELOCATE EXISTING RECEPTACLE. EXTEND ASSOCIATED CONDUIT, WIRING, ETC. TO NEW LOCATION. RE: NEW WORK.

39 EXISTING LIGHT SWITCHES TO REMAIN.

40 REMOVE EXISTING FAUX STREET LIGHT. REMOVE ALL ASSOCIATED CONDUIT, WIRING, ETC. BACK TO SOURCE. IF NECESSARY, SPLICE ANY DOWNSTREAM DEVICES SHOWN TO REMAIN.

41 REMOVE EXISTING ROUGH-IN FOR TV. REMOVE ALL ASSOCIATED CONDUIT, WIRING, ETC. BACK TO SOURCE. IF NECESSARY, SPLICE ANY DOWNSTREAM DEVICES SHOWN TO REMAIN.

42 EXISTING FIRE ALARM DEVICE TO REMAIN. FIELD VERIFY EXACT LOCATION.

43 EXISTING EMERGENCY LIGHT FIXTURE TO REMAIN. FIELD VERIFY EXACT LOCATION.

44 RELOCATE EXISTING EMERGENCY LIGHT FIXTURE AS NECESSARY TO ACCOMMODATE NEW MURAL/EXHIBIT. FIELD VERIFY EXACT LOCATION. EXTEND CIRCUITRY TO NEW LOCATION AS REQUIRED. RE: NEW WORK.

45 EXISTING RECEPTACLE TO REMAIN. FIELD VERIFY EXACT LOCATION.

46 EXISTING CARD READER TO REMAIN. FIELD VERIFY EXACT LOCATION.

47 RELOCATE EXISTING CARD READER. EXTEND ASSOCIATED CONDUIT, WIRING, ETC. TO NEW LOCATION. RE: NEW WORK.

FLOOR PLAN NOTES

48 DISCONNECT DEMOLISHED WATER HEATER. REMOVE ALL ASSOCIATED CONDUIT, WIRING, ETC. BACK TO SOURCE.

49 EXISTING RECEPTACLE ON STRUCTURE ABOVE TO REMAIN. FIELD VERIFY WITH OWNER.

50 REMOVE EXISTING TRACK LIGHT AND ASSOCIATED TRACK HEADS. REMOVE ALL ASSOCIATED CONDUIT, WIRING, ETC. BACK TO SOURCE. IF NECESSARY, SPLICE ANY DOWNSTREAM TRACKS/FIXTURES SHOWN TO REMAIN. TURNOVER ALL REMOVED HEADS AND TRACKS TO OWNER.

51 REMOVE EXISTING FIRE ALARM DEVICE. REMOVE ALL ASSOCIATED CONDUIT, WIRING, ETC. BACK TO LAST DEVICE TO REMAIN. IF NECESSARY, SPLICE ANY DOWNSTREAM DEVICES SHOWN TO REMAIN.

52 REMOVE EXISTING LIGHT AND ASSOCIATED CONDUIT, WIRING, ETC. BACK TO SOURCE. IF NECESSARY, SPLICE ANY DOWNSTREAM TRACKS/FIXTURES SHOWN TO REMAIN.

53 EXISTING TRACK LIGHT AND ASSOCIATED TRACK HEADS TO REMAIN. CONTRACTOR SHALL COORDINATE AIMING/RELOCATING OF HEADS ON TRACK PER DIRECTION OF EXHIBIT INSTALLER, OWNER AND ARCHITECT.

54 EXISTING TRACK LIGHT AND ASSOCIATED TRACK HEADS TO REMAIN. FIELD VERIFY EXACT LOCATION.

55 EXISTING STRIP LIGHT FIXTURE TO REMAIN. FIELD VERIFY EXACT LOCATION.

56 EXISTING SPOT LIGHT FIXTURE TO REMAIN. FIELD VERIFY EXACT LOCATION.

PGAV ARCHITECTS
PECKHAM GUYTON ALBERS & VIETS, INC.
1900 W.47th Place, #200, Westwood, KS 66205
(913) 362-6500 www.PGAV.COM

Copyright ©2015

STATE OF MISSOURI
DOMINICK R. VIVIO
PROFESSIONAL ENGINEER
NUMBER E-2001004656
7/3/19

THE SEAL AND SIGNATURE APPLY ONLY TO THE DOCUMENT TO WHICH THEY ARE AFFIXED AND PGAV ARCHITECTS DISCLAIMS RESPONSIBILITY FOR ALL OTHER PLANS, SPECIFICATIONS, ESTIMATES, REPORTS, OR OTHER DOCUMENTS OR INSTRUMENTS RELATING TO OR INTENDED TO BE USED FOR ANY OR ALL PARTS OF THE ARCHITECTURAL OR ENGINEERING PROJECT.

#	DATE	DESCRIPTION

USKC EARLY CHILDHOOD EXHIBITS

SCIENCE CITY @ UNION STATION
30 W. PERSHING RD
KANSAS CITY, MO 64108

CONSTRUCTION DOCUMENTS

Original Size: 1 1/2" Drawing may have been reduced. 0" 1"

ELECTRICAL DEMOLITION

DATE: 07/03/2019
DRAWN: DVR | CHECKED: DVR
PGAV # 53494-00 | CLIENT #
SHEET #: **E210**

bgr Consulting Engineers
Ph: 816.842.2800
Fx: 816.842.4584
CERTIFICATE OF AUTHORITY # 2006007202

6/28/2019 10:38:10 AM C:\Users\Dominick\Documents\V16 17-Atkinson Station-Elec_dvivenko.rvt

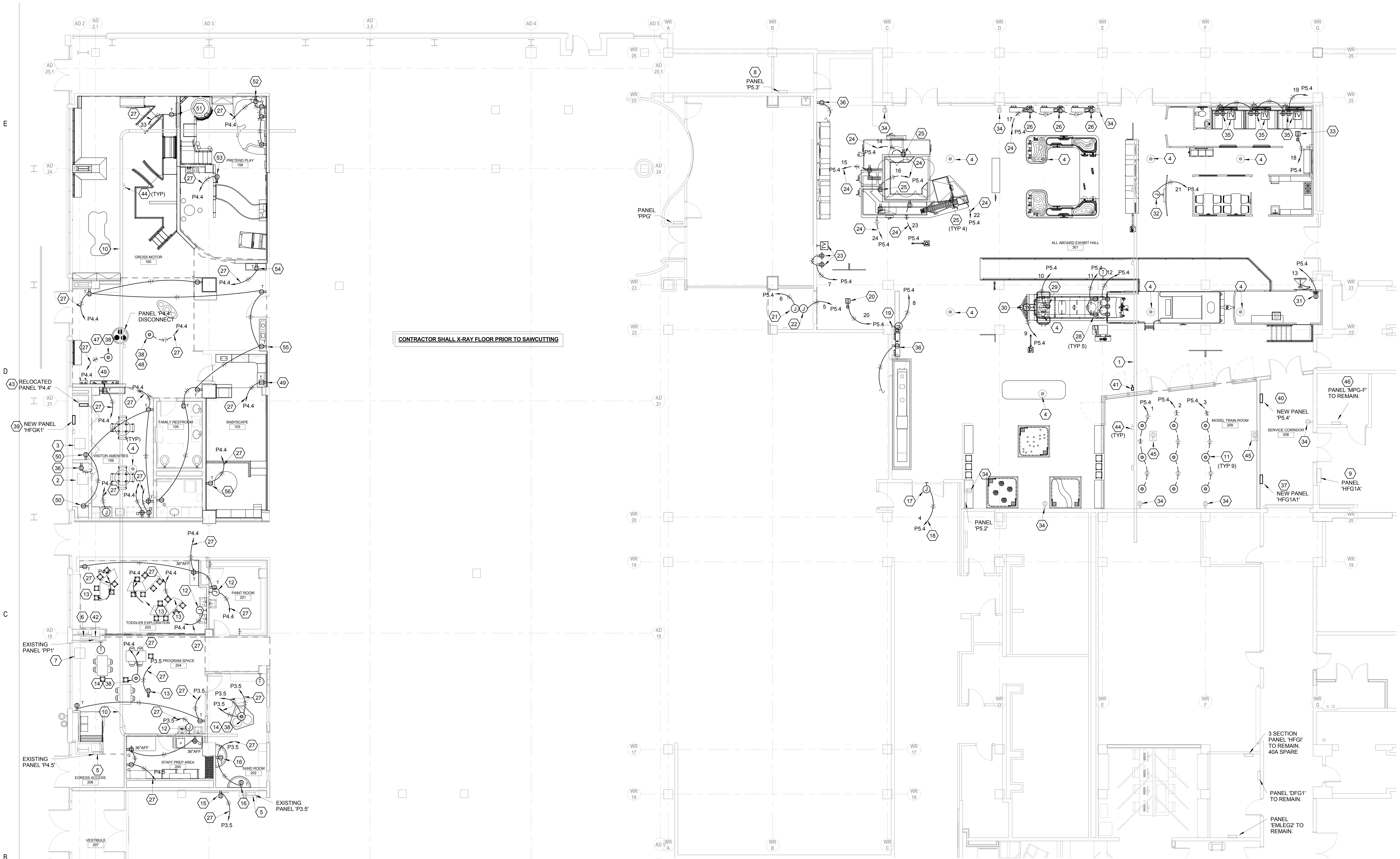

1 LEVEL 1 PLAN - POWER

SCALE: 1/8" = 1'-0"

FLOOR PLAN NOTES

1 EXISTING 400A 120/208V PLUG-IN BUSWAY 'BD-1' TO REMAIN.

2 EXISTING RACK FOR PUBLIC ADDRESS SYSTEM TO REMAIN.

3 EXISTING STRAND 120/208 CP80SV LIGHTING CONTROL CABINET WITH 18 SPACES TO REMAIN.

4 EXISTING FLOOR OUTLET TO REMAIN.

5 EXISTING ELECTRICAL PANEL TO REMAIN. REFER TO PANEL SCHEDULE FOR ANY ASSOCIATED WORK.

6 EXISTING WATT STOPPER LIGHTING CONTROL PANEL TO REMAIN.

7 EXISTING RACK FOR TOUCH SCREEN ABOVE TO REMAIN.

8 EXISTING PANEL P5.3 TO REMAIN. (100A, 120/208V 3PH, 24 POLE)

9 EXISTING PANEL HFG1A TO REMAIN. (400A, 480/277V 3PH, 24 POLE. 300A BREAKER POWERS AHU-40 ELECTRIC HEAT AND 50A BREAKER POWER AHU-40 FAN)

10 EXISTING BUSWAY TO REMAIN.

11 FLOOR BOX WITH OUTLETS FOR O-GAUGE ELECTRIC TRAINS/ACCESSORIES. COORDINATE EXACT LOCATION WITH EXHIBIT FABRICATOR PRIOR TO ROUGH-IN. BOX TO BE A FOUR GANG FLOOR BOX TYPE WITH TWO DUPLEX RECEPTACLES EQUAL TO HUBBELL HBLCFB301BASE/HBLTCGNTBKSW/(2)HBLST302SGY. PROVIDE (2) FACE PLATES FOR THE DATA INSTALLERS USE. COORDINATE THE PLATE STYLE WITH THE INSTALLER. ROUTE A 3/4" CONDUIT FOR POWER ENTRY BELOW THE SLAB TO UNDER NEW WALL CONSTRUCTION AND TURN UP THE WALL AND TO STRUCTURE ABOVE. ROUTE A 1" CONDUIT FOR DATA ENTRY BELOW THE SLAB TO UNDER NEW WALL CONSTRUCTION AND TURN UP THE WALL TO STRUCTURE ABOVE. INSTALL A BUSHING ON THE END OF THE CONDUIT. STEEL CITY #665-CI/665-CST-SW SERIES FLOOR BOX IS ALSO AN ACCEPTABLE BOX.

SAWCUT FLOOR SLAB AS NECESSARY TO INSTALL BOX AND ASSOCIATED CONDUITS. PATCH AND REPAIR ALL SURFACES PER ARCHITECT.

12 PROVIDE AND INSTALL JUNCTION BOX AND MAKE POWER CONNECTION TO ELECTRIC HAND DRYER. COORDINATE EXACT LOCATION WITH ARCHITECTURAL DRAWINGS.

13 PROVIDE AND INSTALL RECEPTACLE TO OVERHEAD STRUCTURE FOR POWER CONNECTION TO INDUSTRIAL CORD REEL. PROVIDE RETRACTABLE CORD REEL SIMILAR TO BAYCO SL-800. SECURE REEL TO STRUCTURE AS REQUIRED. COORDINATE ELEVATION WITH ARCHITECT. PROVIDE UNISTRUT AND THREADED ROD AS NECESSARY TO ACHIEVE PROPER HEIGHT.

14 POWER FOR SPINNER TABLE. PROVIDE A TOTAL OF 3 CIRCUITS TO POWER (3) VARIABLE SPEED MOTORS (GRAINGER #2M510) AND (3) GANTOM FLOORLIGHTS (#4HU8). COORDINATE EXACT LOCATION AND ALL POWER/LOW VOLTAGE REQUIREMENTS WITH EXHIBIT FABRICATOR.

15 POWER FOR EVERBRIGHT DISPLAY. COORDINATE EXACT ELEVATION AND ALL CONNECTION REQUIREMENTS WITH DISPLAY INSTALLER.

16 POWER FOR LIGHT SAND TABLE. COORDINATE EXACT REQUIREMENTS WITH DISPLAY INSTALLER.

17 PROVIDE AND INSTALL JUNCTION BOX AND MAKE POWER CONNECTION TO NEON SIGN. COORDINATE EXACT LOCATION AND ELECTRICAL REQUIREMENTS WITH SIGN INSTALLER PRIOR TO ROUGH-IN. MOUNT TRANSFORMER AND TOGGLE TYPE DISCONNECT CONCEALED NEARBY TO AS NECESSARY.

18 ROUTE HOMERUN THROUGH RELAY IN THE LIGHTING CONTROL PANEL LOCATED IN SERVICE CORRIDOR.

19 PROVIDE AND INSTALL JUNCTION BOX AND MAKE POWER CONNECTION TO SEMAPHORE SIGNAL LIGHTS. COORDINATE EXACT LOCATION AND ALL ELECTRICAL REQUIREMENTS WITH EXHIBIT FABRICATOR PRIOR TO ROUGH-IN. EXTEND CONDUIT UP WITHIN SIGNAL AS NECESSARY FOR CONNECTION. PROVIDE AND INSTALL TOGGLE TYPE DISCONNECT IF UNIT DOES NOT HAVE ANOTHER MEANS OF DISCONNECTION. LIGHTS ARE TO BE CONTROLLED BY PROGRAMMABLE TIMER. ROUTE CIRCUIT THROUGH TIMER AS REQUIRED.

20 PROVIDE POWER CONNECTION TO MPEG PLAYER AND AMPLIFIER. COORDINATE EXACT LOCATION AND ALL ELECTRICAL REQUIREMENTS WITH EXHIBIT INSTALLER PRIOR TO ROUGH-IN.

21 PROVIDE AND INSTALL JUNCTION BOX AND MAKE POWER CONNECTION TO FLIP DISK DISPLAY. COORDINATE EXACT LOCATION AND ELECTRICAL REQUIREMENTS WITH EXHBIIT FABRICATOR PRIOR TO ROUGH-IN. PROVIDE AND INSTALL TOGGLE TYPE DISCONNECT IF UNIT DOES NOT HAVE ANOTHER MEANS OF DISCONNECTION.

22 PROVIDE AND INSTALL JUNCTION BOX AND MAKE POWER CONNECTION TO STATION CLOCK. COORDINATE EXACT LOCATION AND ELECTRICAL REQUIREMENTS WITH EXHIBIT FABRICATOR PRIOR TO ROUGH-IN. EXTEND CONDUIT WITHIN CLOCK AS NECESSARY FOR CONNECTION. PROVIDE AND INSTALL TOGGLE TYPE DISCONNECT IF UNIT DOES NOT HAVE ANOTHER MEANS OF DISCONNECTION.

23 PROVIDE AND INSTALL ARLINGTON # TVBS507, RECESSED THREE-GANG STEEL BOX WITH (2) DUPLEX RECEPTACLES AND SINGLE-GANG FOR COAX CONNECTOR FOR MONITOR AND PLAYER. COORDINATE EXACT LOCATION AND TYPE FOR ALL DEVICES WITH EXHIBIT FABRICATOR PRIOR TO PURCHASING/ROUGH-IN.

24 ROUTE HOMERUN BELOW FLOOR SLAB TO WALL. TURN UP CONCEALED WITHIN WALL AND TURN OUT AT BOTTOM SIDE OF STRUCTURE. SAWCUT SLAB AND REMOVE DRY WALL AS NECESSARY. PATCH AND REPAIR ALL SURFACES PER ARCHITECT.

25 PROVIDE ROUGH-IN AND POWER CONNECTION TO MOTORS (4), BLOWER AND PROGRAMMABLE LOGIC CONTROLLER. COORDINATE EXACT LOCATION AND ELECTRICAL REQUIREMENTS WITH EXHIBIT FABRICATOR PRIOR TO ROUGH-IN. CONCEAL CONDUITS WITHIN EXHIBIT AS NECESSARY FOR CONNECTION. PROVIDE AND INSTALL TOGGLE TYPE DISCONNECT AT EQUIPMENT IF THERE IS NO INTEGRAL MEANS FOR DISCONNECT.

26 PROVIDE AND INSTALL J-BOX AT FLOOR AND DUPLEX RECEPTACLE WITHIN BUILT-IN J-BOX IN 4" LEG OF FIXTURE FOR TABLET. COORDINATE EXACT LOCATION WITH EXHIBIT FABRICATOR PRIOR TO ROUGH-IN. EXTEND MC CABLE FROM FLOOR J-BOX TO RECEPTACLE AS REQUIRED.

27 HOMERUN TO INDICATED PANEL AND TERMINATE ON AN EXISTING SPARE BREAKER. IF NO SPARE IS AVAILABLE, PROVIDE AND INSTALL NEW 20AMP BREAKER IN AVAILABLE SPACE. FIELD VERIFY EXISTING PANEL CONDITION AND NOTIFY ARCHITECT/ENGINEER IF PROBLEMS ARE FOUND.

28 PROVIDE POWER CONNECTION TO MONITOR, VIDEO PLAYER, EFFECT LIGHTING, AUDIO PLAYER AND PROGRAMMABLE LOGIC CONTROLLER WITHIN CAB. COORDINATE EXACT LOCATION AND ALL ELECTRICAL REQUIREMENTS WITH EXHIBIT FABRICATOR PRIOR TO ROUGH-IN. EXTEND CONDUIT CONCEALED WITHIN EXHIBIT AS NECESSARY FOR CONNECTION. ROUTE CONDUIT TO WALL ALONG COLUMN 'WRG' OR TO ADJACENT COLUMN AND UP TO ROOF STRUCTURE.

29 PROVIDE POWER CONNECTION TO VIDEO/LIGHTING EFFECT PROJECTOR WITHIN LOCOMOTIVE. COORDINATE EXACT LOCATION AND ALL ELECTRICAL REQUIREMENTS WITH EXHIBIT FABRICATOR PRIOR TO ROUGH-IN. EXTEND CONDUIT CONCEALED WITHIN EXHIBIT AS NECESSARY FOR CONNECTION. ROUTE CONDUIT TO WALL ALONG COLUMN 'WRG' OR TO ADJACENT COLUMN AND UP TO ROOF STRUCTURE.

30 PROVIDE AND INSTALL JUNCTION BOX AND MAKE POWER CONNECTION TO LOCOMOTIVE HEAD LIGHT AND MARKER LIGHTS. COORDINATE EXACT LOCATION AND ALL ELECTRICAL REQUIREMENTS WITH EXHIBIT FABRICATOR PRIOR TO ROUGH-IN. PROVIDE AND INSTALL TOGGLE TYPE DISCONNECT IF UNIT DOES NOT HAVE ANOTHER MEANS OF DISCONNECTION. EXTEND CONDUIT CONCEALED WITHIN EXHIBIT AS NECESSARY FOR CONNECTION. ROUTE CONDUIT TO WALL ALONG COLUMN 'WRG' OR TO ADJACENT COLUMN AND UP TO ROOF STRUCTURE.

FLOOR PLAN NOTES

31 PROVIDE AND INSTALL RECEPTACLE FOR TABLET. COORDINATE EXACT LOCATION AND ALL ELECTRICAL REQUIREMENTS WITH EXHIBIT FABRICATOR PRIOR TO ROUGH-IN. CONCEAL CONDUIT WITHIN EXHIBIT AND ROUTE UP ALONG WALL AT COLUMN 'WRG' TO ROOF STRUCTURE.

32 PROVIDE AND INSTALL JUNCTION BOX AND MAKE POWER CONNECTION TO DRUMHEAD LIGHT. COORDINATE EXACT LOCATION AND ELECTRICAL REQUIREMENTS WITH EXHIBIT FABRICATOR PRIOR TO ROUGH-IN. EXTEND CONDUIT CONCEALED WITHIN DINING CAR AS NECESSARY FOR CONNECTION. PROVIDE AND INSTALL TOGGLE TYPE DISCONNECT IF UNIT DOES NOT HAVE ANOTHER MEANS OF DISCONNECTION. ROUTE CONDUIT UP ALONG WALL AT COLUMN 'WRG' TO ROOF STRUCTURE.

33 PROVIDE AND INSTALL QUAD OUTLET FOR MPEG PLAYER AND ASSOCIATED AMPLIFIER. COORDINATE EXACT LOCATION AND ALL ELECTRICAL REQUIREMENTS WITH EXHIBIT FABRICATOR PRIOR TO ROUGH-IN. CONCEAL CONDUIT WITHIN SLEEPER CAR WALLS AND ROUTE UP ALONG WALL AT COLUMN 'WRG' TO ROOF STRUCTURE.

34 EXISTING RECEPTACLE TO REMAIN.

35 DAY TO NIGHT SLEEPER CAR WINDOW EFFECTS. PROVIDE AND INSTALL ARLINGTON # TVBS507, RECESSED THREE-GANG STEEL BOX WITH (2) DUPLEX RECEPTACLES AND SINGLE-GANG FOR VIDEO CONNECTOR FOR 42" MONITOR AND PLAYER. COORDINATE DEVICE TYPES, HEIGHT AND LOCATIONS WITH EXHIBIT FABRICATOR PRIOR TO ROUGH-IN. CONCEAL CONDUIT WITHIN SLEEPER CAR WALLS AND ROUTE UP ALONG WALL AT COLUMN 'WRG' TO ROOF STRUCTURE. PAINT ANY EXPOSED CONDUITS PER ARCHITECT/DESIGNER.

36 RELOCATED RECEPTACLE. EXTEND EXISTING CIRCUITRY AS REQUIRED.

37 NEW PANEL HFG1A1 TO BE FED FROM EXISTING PANEL 'HFG1A'. (100A, 480/277V 3PH) REFER TO RISER DIAGRAM FOR FEEDER INFORMATION.

38 PROVIDE AND INSTALL A FOUR GANG FLOOR BOX WITH FOUR DUPLEX RECEPTACLES EQUAL TO HUBBELL HBLCFB301BASE/HBLTCGNTBKSW/(4)HBLST302SGY. ROUTE A 3/4" CONDUIT FOR CIRCUITRY BELOW THE SLAB TO UNDER NEW WALL CONSTRUCTION AND TURN UP THE WALL TO ABOVE THE CEILING. STEEL CITY #665-CI/665-CST-SW SERIES FLOOR BOX IS ALSO AN ACCEPTABLE BOX.

SAWCUT FLOOR SLAB AS NECESSARY TO INSTALL BOX AND ASSOCIATED CONDUITS. PATCH AND REPAIR ALL SURFACES PER ARCHITECT.

FLOOR PLAN NOTES

39 NEW PANEL HFGK1 TO BE FED FROM EXISTING PANEL MGP-F. (150A, 480/277V 3PH) REFER TO RISER DIAGRAM FOR FEEDER INFORMATION.

40 NEW PANEL P5.4. CONNECT TO EXISTING BUS DUCT 'BD-1'. REFER TO ONE LINE DIAGRAM FOR ADDITIONAL INFORMATION.

41 PROVIDE NEW 60A FUSED DISCONNECT ON EXISTING BUS DUCT 'BD-1'. COORDINATE TYPE WITH ALL EXISTING CONDITIONS. REFER TO ONE LINE DIAGRAM FOR ADDITIONAL INFORMATION. USE OF ONE THE EXISTING DISCONNECTS IS ALLOWED IF ONE IS FOUND TO BE A SPARE. FIELD VERIFY WITH OWNER.

42 EXISTING ELECTRICAL PANEL TO REMAIN.

43 EXTEND PANEL FEEDER TO NEW LOCATION AS REQUIRED. RECONNECT/EXTEND ANY EXISTING TO REMAIN LOADS AS NECESSARY.

44 EXISTING PLUG-IN FUSED DISCONNECT ON BUSWAY TO REMAIN. USE OF ONE THE EXISTING DISCONNECTS IS ALLOWED FOR NEW POWER CONNECTION IF IT IS FOUND TO BE A SPARE. FIELD VERIFY WITH OWNER.

45 EXISTING RECEPTACLE ON STRUCTURE ABOVE TO REMAIN. FIELD VERIFY EXACT LOCATION.

46 PROVIDE AND INSTALL NEW BREAKER IN SPACE AVAILABLE TO POWER NEW PANEL 'HFGK1'. REFER TO ONE LINE DIAGRAM FOR FEEDER INFORMATION.

47 POWER FOR AIR TABLE. COORDINATE EXACT LOCATION AND ALL POWER REQUIREMENTS WITH EXHIBIT FABRICATOR PRIOR TO ROUGH-IN.

48 POWER FOR WIND TABLE. COORDINATE EXACT LOCATION AND ALL POWER REQUIREMENTS WITH EXHIBIT FABRICATOR PRIOR TO ROUGH-IN.

49 POWER FOR AQUARIUM. COORDINATE EXACT LOCATION AND ALL POWER REQUIREMENTS WITH EXHIBIT FABRICATOR PRIOR TO ROUGH-IN.

50 POWER FOR RECHARGING EQUIPMENT. FIELD VERIFY EXACT LOCATION WITH ALL EXISTING CONDITIONS.

51 PROVIDE POWER FOR MARBLE MAZE. COORDINATE EXACT LOCATION AND ALL POWER REQUIREMENTS WITH EXHIBIT FABRICATOR PRIOR TO ROUGH-IN.

FLOOR PLAN NOTES

52 PROVIDE POWER FOR CAVE CEILING LIGHTS AND DISPLAY CASES. COORDINATE EXACT LOCATION AND ALL POWER REQUIREMENTS WITH EXHIBIT FABRICATOR PRIOR TO ROUGH-IN.

53 PROVIDE POWER AT CEILING FOR DOORBELL. COORDINATE EXACT LOCATION AND ALL POWER REQUIREMENTS WITH EXHIBIT FABRICATOR PRIOR TO ROUGH-IN.

54 PROVIDE POWER FOR LIGHT TABLE. COORDINATE EXACT LOCATION AND ALL POWER REQUIREMENTS WITH EXHIBIT FABRICATOR PRIOR TO ROUGH-IN.

55 PROVIDE OUTLET WITHIN STAFF CUBBY. COORDINATE EXACT LOCATION WITH EXHIBIT FABRICATOR PRIOR TO ROUGH-IN.

56 PROVIDE POWER FOR WATERBED HEATER. COORDINATE EXACT LOCATION AND ALL POWER REQUIREMENTS WITH EXHIBIT FABRICATOR PRIOR TO ROUGH-IN.

PGAV ARCHITECTS
PECKHAM GUYTON ALBERS & VIETS, INC.
1900 W.47th Place, #300, Westwood, KS 66205
(913) 362-6500 www.PGAV.COM
Copyright ©2015

STATE OF MISSOURI
DOMINICK V. RUCERETO
NUMBER E-2001004656
7/3/19
REGISTERED PROFESSIONAL ENGINEER

THE SEAL AND SIGNATURE APPLY ONLY TO THE DOCUMENT TO WHICH THEY ARE AFFIXED, AND EXPRESSLY DISCLAIM ANY RESPONSIBILITY FOR ALL OTHER PLANS, SPECIFICATIONS, ESTIMATES, REPORTS, OR OTHER DOCUMENTS OR INSTRUMENTS RELATING TO OR INTENDED TO BE USED FOR ANY PART OR PARTS OF THE ARCHITECTURAL OR ENGINEERING PROJECT.

#	DATE	DESCRIPTION

USKC EARLY CHILDHOOD EXHIBITS

SCIENCE CITY @ UNION STATION
30 W. PERSHING RD
KANSAS CITY, MO 64108

CONSTRUCTION DOCUMENTS

Original Size: 1 1/2" Drawing may have been reduced.
0" 1"

POWER PLAN

DATE: 07/03/2019
DRAWN: DVR CHECKED: DVR
PGAV #: 53494-00 CLIENT #:
SHEET #: **E310**

bgr Consulting Engineers
Ph: 816.842.2800
Fx: 816.842.4884
CERTIFICATE OF AUTHORITY
2006007202

DVR
C:\Users\Dominick\Documents\(v16) 17-xUnion Station-Elec_drucereto.rvt
6/28/2019 10:38:38 AM

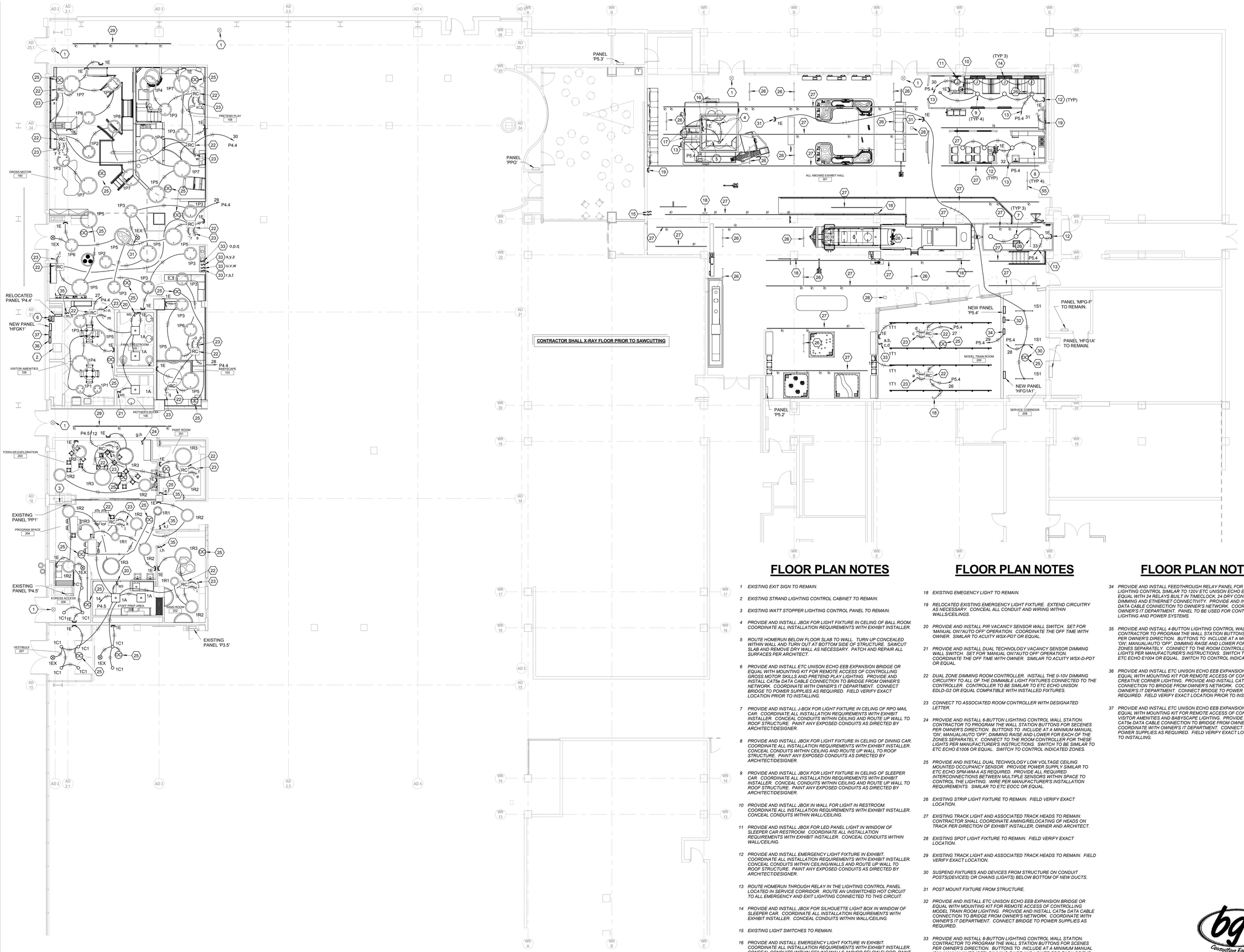

FLOOR PLAN NOTES

1 *EXISTING EXIT SIGN TO REMAIN.*

2 *EXISTING STRAND LIGHTING CONTROL CABINET TO REMAIN.*

3 *EXISTING WATT STOPPER LIGHTING CONTROL PANEL TO REMAIN.*

4 *PROVIDE AND INSTALL JBOX FOR LIGHT FIXTURE IN CELING OF BALL ROOM. COORDINATE ALL INSTALLATION REQUIREMENTS WITH EXHIBIT INSTALLER.*

5 *ROUTE HOMERUN BELOW FLOOR SLAB TO WALL. TURN UP CONCEALED WITHIN WALL AND TURN OUT AT BOTTOM SIDE OF STRUCTURE. SAWCUT SLAB AND REMOVE DRY WALL AS NECESSARY. PATCH AND REPAIR ALL SURFACES PER ARCHITECT.*

6 *PROVIDE AND INSTALL ETC UNISON ECHO EEB EXPANSION BRIDGE OR EQUAL WITH MOUNTING KIT FOR REMOTE ACCESS OF CONTROLLING GROSS MOTOR SKILLS AND PRETEND PLAY LIGHTING. PROVIDE AND INSTALL CAT5e DATA CABLE CONNECTION TO BRIDGE FROM OWNER'S NETWORK. COORDINATE WITH OWNER'S IT DEPARTMENT. CONNECT BRIDGE TO POWER SUPPLIES AS REQUIRED. FIELD VERIFY EXACT LOCATION PRIOR TO INSTALLING.*

7 *PROVIDE AND INSTALL J-BOX FOR LIGHT FIXTURE IN CELING OF RPO MAIL CAR. COORDINATE ALL INSTALLATION REQUIREMENTS WITH EXHIBIT INSTALLER. CONCEAL CONDUITS WITHIN CEILING AND ROUTE UP WALL TO ROOF STRUCTURE. PAINT ANY EXPOSED CONDUITS AS DIRECTED BY ARCHITECT/DESIGNER.*

8 *PROVIDE AND INSTALL JBOX FOR LIGHT FIXTURE IN CELING OF DINING CAR. COORDINATE ALL INSTALLATION REQUIREMENTS WITH EXHIBIT INSTALLER. CONCEAL CONDUITS WITHIN CEILING AND ROUTE UP WALL TO ROOF STRUCTURE. PAINT ANY EXPOSED CONDUITS AS DIRECTED BY ARCHITECT/DESIGNER.*

9 *PROVIDE AND INSTALL JBOX FOR LIGHT FIXTURE IN CELING OF SLEEPER CAR. COORDINATE ALL INSTALLATION REQUIREMENTS WITH EXHIBIT INSTALLER. CONCEAL CONDUITS WITHIN CEILING AND ROUTE UP WALL TO ROOF STRUCTURE. PAINT ANY EXPOSED CONDUITS AS DIRECTED BY ARCHITECT/DESIGNER.*

10 *PROVIDE AND INSTALL JBOX IN WALL FOR LIGHT IN RESTROOM. COORDINATE ALL INSTALLATION REQUIREMENTS WITH EXHIBIT INSTALLER. CONCEAL CONDUITS WITHIN WALL/CEILING.*

11 *PROVIDE AND INSTALL JBOX FOR LED PANEL LIGHT IN WINDOW OF SLEEPER CAR RESTROOM. COORDINATE ALL INSTALLATION REQUIREMENTS WITH EXHIBIT INSTALLER. CONCEAL CONDUITS WITHIN WALL/CEILING.*

12 *PROVIDE AND INSTALL EMERGENCY LIGHT FIXTURE IN EXHIBIT. COORDINATE ALL INSTALLATION REQUIREMENTS WITH EXHIBIT INSTALLER. CONCEAL CONDUITS WITHIN CEILING/WALLS AND ROUTE UP WALL TO ROOF STRUCTURE. PAINT ANY EXPOSED CONDUITS AS DIRECTED BY ARCHITECT/DESIGNER.*

13 *ROUTE HOMERUN THROUGH RELAY IN THE LIGHTING CONTROL PANEL LOCATED IN SERVICE CORRIDOR. ROUTE AN UNSWITCHED HOT CIRCUIT TO ALL EMERGENCY AND EXIT LIGHTING CONNECTED TO THIS CIRCUIT.*

14 *PROVIDE AND INSTALL JBOX FOR SILHOUETTE LIGHT BOX IN WINDOW OF SLEEPER CAR. COORDINATE ALL INSTALLATION REQUIREMENTS WITH EXHIBIT INSTALLER. CONCEAL CONDUITS WITHIN WALL/CEILING.*

15 *EXISTING LIGHT SWITCHES TO REMAIN.*

16 *PROVIDE AND INSTALL EMERGENCY LIGHT FIXTURE IN EXHIBIT. COORDINATE ALL INSTALLATION REQUIREMENTS WITH EXHIBIT INSTALLER. CONCEAL CONDUITS WITHIN CEILING/WALLS AND/OR BELOW FLOOR. PAINT EXPOSED CONDUITS AS DIRECTED BY ARCHITECT/DESIGNER.*

17 *PROVIDE AND INSTALL JBOX FOR LIGHT FIXTURE ON LEFT AND RIGHT SIDE OF GRAIN ELEVATOR WINDOW TO LIGHT INTERIOR. COORDINATE ALL INSTALLATION REQUIREMENTS WITH EXHIBIT INSTALLER.*

FLOOR PLAN NOTES

18 *EXISTING EMEGENCY LIGHT TO REMAIN.*

19 *RELOCATED EXISTING EMERGENCY LIGHT FIXTURE. EXTEND CIRCUITRY AS NECESSARY. CONCEAL ALL CONDUIT AND WIRING WITHIN WALLS/CEILINGS.*

20 *PROVIDE AND INSTALL PIR VACANCY SENSOR WALL SWITCH. SET FOR 'MANUAL ON'/'AUTO OFF' OPERATION. COORDINATE THE OFF TIME WITH OWNER. SIMILAR TO ACUITY WSX-PDT OR EQUAL.*

21 *PROVIDE AND INSTALL DUAL TECHNOLOGY VACANCY SENSOR DIMMING WALL SWITCH. SET FOR 'MANUAL ON'/'AUTO OFF' OPERATION. COORDINATE THE OFF TIME WITH OWNER. SIMILAR TO ACUITY WSX-D-PDT OR EQUAL.*

22 *DUAL ZONE DIMMING ROOM CONTROLLER. INSTALL THE 0-10V DIMMING CIRCUITRY TO ALL OF THE DIMMABLE LIGHT FIXTURES CONNECTED TO THE CONTROLLER. CONTROLLER TO BE SIMILAR TO ETC ECHO UNISON EDLD-G2 OR EQUAL COMPATIBLE WITH INSTALLED FIXTURES.*

23 *CONNECT TO ASSOCIATED ROOM CONTROLLER WITH DESIGNATED LETTER.*

24 *PROVIDE AND INSTALL 6-BUTTON LIGHTING CONTROL WALL STATION. CONTRACTOR TO PROGRAM THE WALL STATION BUTTONS FOR SECENES PER OWNER'S DIRECTION. BUTTONS TO INCLUDE AT A MINIMUM MANUAL 'ON', MANUAL/AUTO 'OFF'. DIMMING RAISE AND LOWER FOR EACH OF THE ZONES SEPARATELY. CONNECT TO THE ROOM CONTROLLER FOR THESE LIGHTS PER MANUFACTURER'S INSTRUCTIONS. SWITCH TO BE SIMILAR TO ETC ECHO E1006 OR EQUAL. SWITCH TO CONTROL INDICATED ZONES.*

25 *PROVIDE AND INSTALL DUAL TECHNOLOGY LOW VOLTAGE CEILING MOUNTED OCCUPANCY SENSOR. PROVIDE POWER SUPPLY SIMILAR TO ETC ECHO SPM-WM-A AS REQUIRED. PROVIDE ALL REQUIRED INTERCONNECTIONS BETWEEN MULTIPLE SENSORS WITHIN SPACE TO CONTROL THE LIGHTING. WIRE PER MANUFACTURER'S INSTALLATION REQUIREMENTS. SIMILAR TO ETC EOCC OR EQUAL.*

26 *EXISTING STRIP LIGHT FIXTURE TO REMAIN. FIELD VERIFY EXACT LOCATION.*

27 *EXISTING TRACK LIGHT AND ASSOCIATED TRACK HEADS TO REMAIN. CONTRACTOR SHALL COORDINATE AIMING/RELOCATING OF HEADS ON TRACK PER DIRECTION OF EXHIBIT INSTALLER, OWNER AND ARCHITECT.*

28 *EXISTING SPOT LIGHT FIXTURE TO REMAIN. FIELD VERIFY EXACT LOCATION.*

29 *EXISTING TRACK LIGHT AND ASSOCIATED TRACK HEADS TO REMAIN. FIELD VERIFY EXACT LOCATION.*

30 *SUSPEND FIXTURES AND DEVICES FROM STRUCTURE ON CONDUIT POSTS(DEVICES) OR CHAINS (LIGHTS) BELOW BOTTOM OF NEW DUCTS.*

31 *POST MOUNT FIXTURE FROM STRUCTURE.*

32 *PROVIDE AND INSTALL ETC UNISON ECHO EEB EXPANSION BRIDGE OR EQUAL WITH MOUNTING KIT FOR REMOTE ACCESS OF CONTROLLING MODEL TRAIN ROOM LIGHTING. PROVIDE AND INSTALL CAT5e DATA CABLE CONNECTION TO BRIDGE FROM OWNER'S NETWORK. COORDINATE WITH OWNER'S IT DEPARTMENT. CONNECT BRIDGE TO POWER SUPPLIES AS REQUIRED.*

33 *PROVIDE AND INSTALL 8-BUTTON LIGHTING CONTROL WALL STATION. CONTRACTOR TO PROGRAM THE WALL STATION BUTTONS FOR SCENES PER OWNER'S DIRECTION. BUTTONS TO INCLUDE AT A MINIMUM MANUAL 'ON', MANUAL/AUTO 'OFF'. DIMMING RAISE AND LOWER FOR EACH OF THE ZONES SEPARATELY. CONNECT TO THE ROOM CONTROLLER FOR THESE LIGHTS PER MANUFACTURER'S INSTRUCTIONS. SWITCH TO BE SIMILAR TO ETC ECHO E1008 OR EQUAL. SWITCH TO CONTROL INDICATED ZONES.*

FLOOR PLAN NOTES

34 *PROVIDE AND INSTALL FEEDTHROUGH RELAY PANEL FOR EXHIBIT LIGHTING CONTROL SIMILAR TO 120V ETC UNISON ECHO ERP24-FT24 OR EQUAL WITH 24 RELAYS BUILT IN TIMECLOCK, 24 DRY CONTACTS, 0-10V DIMMING AND ETHERNET CONNECTIVITY. PROVIDE AND INSTALL CAT5e DATA CABLE CONNECTION TO OWNER'S NETWORK. COORDINATE WITH OWNER'S IT DEPARTMENT. PANEL TO BE USED FOR CONTROL OF EXHIBIT LIGHTING AND POWER SYSTEMS.*

35 *PROVIDE AND INSTALL 4-BUTTON LIGHTING CONTROL WALL STATION. CONTRACTOR TO PROGRAM THE WALL STATION BUTTONS FOR SECENES PER OWNER'S DIRECTION. BUTTONS TO INCLUDE AT A MINIMUM MANUAL 'ON', MANUAL/AUTO 'OFF', DIMMING RAISE AND LOWER FOR EACH OF THE ZONES SEPARATELY. CONNECT TO THE ROOM CONTROLLER FOR THESE LIGHTS PER MANUFACTURER'S INSTRUCTIONS. SWITCH TO BE SIMILAR TO ETC ECHO E1004 OR EQUAL. SWITCH TO CONTROL INDICATED ZONES.*

36 *PROVIDE AND INSTALL ETC UNISON ECHO EEB EXPANSION BRIDGE OR EQUAL WITH MOUNTING KIT FOR REMOTE ACCESS OF CONTROLLING CREATIVE CORNER LIGHTING. PROVIDE AND INSTALL CAT5e DATA CABLE CONNECTION TO BRIDGE FROM OWNER'S NETWORK. COORDINATE WITH OWNER'S IT DEPARTMENT. CONNECT BRIDGE TO POWER SUPPLIES AS REQUIRED. FIELD VERIFY EXACT LOCATION PRIOR TO INSTALLING.*

37 *PROVIDE AND INSTALL ETC UNISON ECHO EEB EXPANSION BRIDGE OR EQUAL WITH MOUNTING KIT FOR REMOTE ACCESS OF CONTROLLING VISITOR AMENITIES AND BABYSCAPE LIGHTING. PROVIDE AND INSTALL CAT5e DATA CABLE CONNECTION TO BRIDGE FROM OWNER'S NETWORK. COORDINATE WITH OWNER'S IT DEPARTMENT. CONNECT BRIDGE TO POWER SUPPLIES AS REQUIRED. FIELD VERIFY EXACT LOCATION PRIOR TO INSTALLING.*

1 LEVEL 1 PLAN - LIGHTING
SCALE: 1/8" = 1'-0"

PGAV ARCHITECTS
PECKHAM GUYTON ALBERS & VIETS, INC.
1900 W.47th Place, #200, Westwood, KS 66205
(913) 362-4500 www.PGAV.COM

Copyright ©2015

STATE OF MISSOURI
DOMINICK R. RUGGERIO
NUMBER E-2001004656
7/3/19
REGISTERED PROFESSIONAL ENGINEER

THE SEAL AND SIGNATURE APPLY ONLY TO THE DOCUMENT TO WHICH IT IS AFFIXED AND DOES NOT EXTEND TO ANY REVISIONS RESPONSIBILITY FOR ALL OTHER PLANS, SPECIFICATIONS, ESTIMATES, REPORTS, OR OTHER DOCUMENTS OR INSTRUMENTS RELATIVE TO OR INTENDED FOR USE ON ANY OTHER PARTS OF THE ARCHITECTURAL OR ENGINEERING PROJECT.

#	DATE	DESCRIPTION

USKC EARLY CHILDHOOD EXHIBITS

SCIENCE CITY @ UNION STATION
30 W. PERSHING RD
KANSAS CITY, MO 64108

CONSTRUCTION DOCUMENTS

Original Size: 1 1/2" Drawing may have been reduced.
0" 1"

LIGHTING PLAN

DATE:	07/03/2019
DRAWN: DVR	CHECKED: DVR
PGAV #: 53494-00	CLIENT #:
SHEET #:	E410

bgr Consulting Engineers
Ph: 816.842.2800
Fx: 816.842.4584
CERTIFICATE OF AUTHORITY # 2006007202

6/28/2019 10:39:10 AM C:\Users\Dominick\Documents\V16 T1\Union Station-Elec_dvsvente.rvt

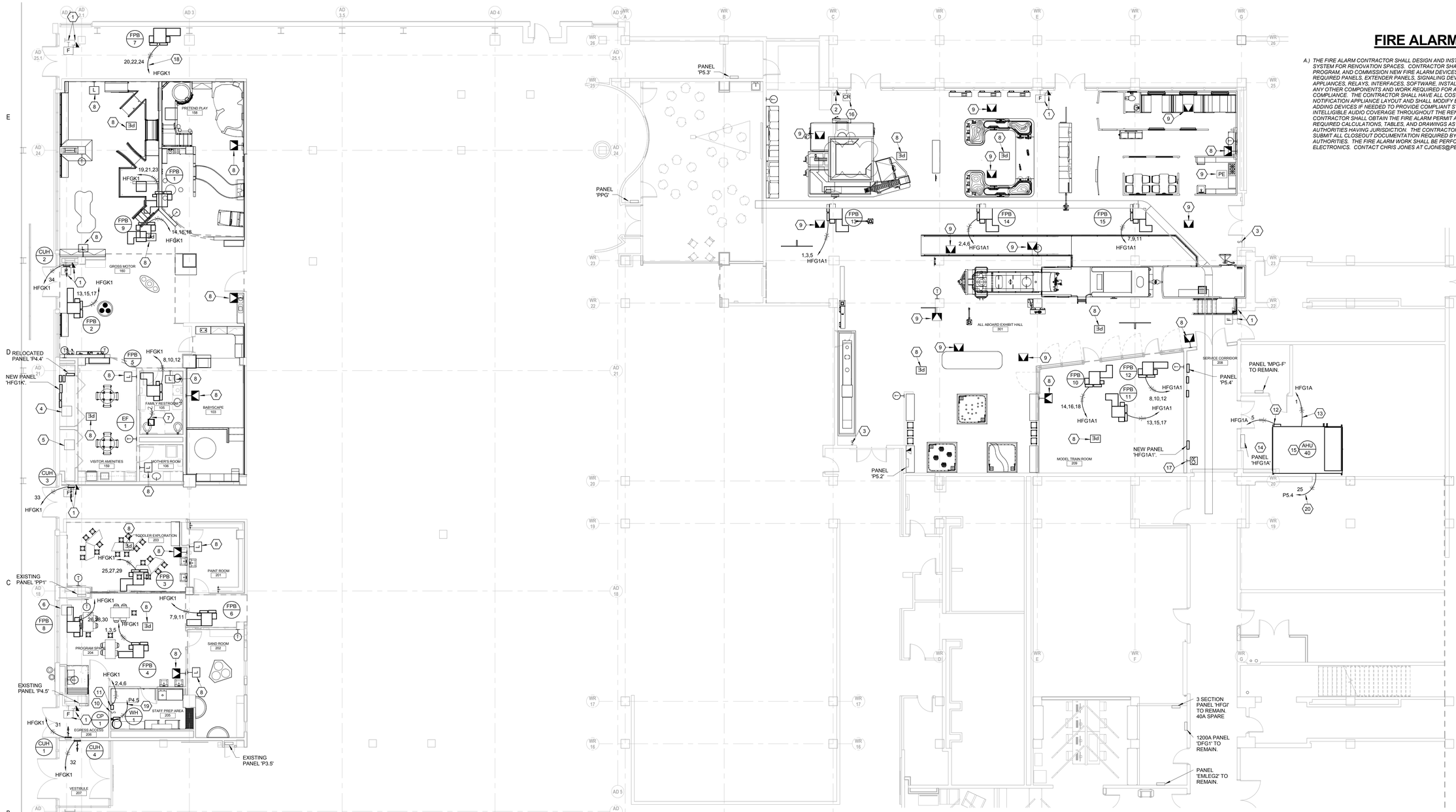

FIRE ALARM

A.) THE FIRE ALARM CONTRACTOR SHALL DESIGN AND INSTALL NEW FIRE ALARM SYSTEM FOR RENOVATION SPACES. CONTRACTOR SHALL PROVIDE, INSTALL, PROGRAM, AND COMMISSION NEW FIRE ALARM DEVICES SHOWN. PROVIDE ALL REQUIRED PANELS, EXTENDER PANELS, SIGNALING DEVICES, NOTIFICATION APPLIANCES, RELAYS, INTERFACES, SOFTWARE, INSTALLATIONS, WIRING, AND ANY OTHER COMPONENTS AND WORK REQUIRED FOR A COMPLETE, CODE COMPLIANCE. THE CONTRACTOR SHALL HAVE ALL COSTS COVERED TO VERIFY NOTIFICATION APPLIANCE LAYOUT AND SHALL MODIFY BY MOVING AND/OR ADDING DEVICES IF NEEDED TO PROVIDE COMPLIANT STROBE COVERAGE AND INTELLIGIBLE AUDIO COVERAGE THROUGHOUT THE RENOVATION. THE CONTRACTOR SHALL OBTAIN THE FIRE ALARM PERMIT AND SHALL PROVIDE ALL REQUIRED CALCULATIONS, TABLES, AND DRAWINGS AS REQUIRED BY THE AUTHORITIES HAVING JURISDICTION. THE CONTRACTOR SHALL COMPLETE AND SUBMIT ALL CLOSEOUT DOCUMENTATION REQUIRED BY THE LOCAL BUILDING AUTHORITIES. THE FIRE ALARM WORK SHALL BE PERFOMED BY PROGRESSIVE ELECTRONICS. CONTACT CHRIS JONES AT CJONES@PEIKC.COM.

FLOOR PLAN NOTES

1 *EXISTING FIRE ALARM COMMUNICATION DEVICE AND PULL STATION TO REMAIN.*

2 *EXISTING FIRE ALARM COMMUNICATION DEVICE TO REMAIN.*

3 *EXISTING PUSH TO EXIT BUTTON TO REMAIN.*

4 *EXISTING STRAND LIGHTING CONTROL CABINET TO REMAIN.*

5 *EXISTING RACK FOR PUBLIC ADDRESS SYSTEM TO REMAIN.*

6 *EXISTING RACK FOR TOUCH SCREEN ABOVE TO REMAIN.*

7 *CONNECT TO LIGHTING CIRCUIT IN THIS ROOM. REFER TO LIGHTING PLAN.*

8 *PROVIDE NEW FIRE ALARM DEVICE. CONNECT TO EXISTING FIRE ALARM SYSTEM AS REQUIRED. COORDINATE ALL WORK WITH PROGRESSIVE ELECTRONICS.*

9 *EXISTING FIRE ALARM DEVICE TO REMAIN.*

10 *PROVIDE AND INSTALL 120V 20A TOGGLE SWITCH FOR CIRC. PUMP DISCONNECT. CONNECT POWER TO CIRC. PUMP AND AQUASTAT (CONTROLLER).*

11 *PROVIDE 20A 3P DISCONNECT FOR WATER HEATER. CONNECT TO WATER HEATER AND HOME RUN TO INDCIATED PANEL.*

12 *INSTALL THE AHU VARIABLE FREQUENCY DRIVE PROVIDED BY MECHANICAL CONTRACTOR. HOMERUN AND MAKE POWER CONNECTION TO AHU SUPPLY FAN WITH 4-#6, 1-#8 GND IN A 1"C. COORDINATE WORK WITH MECHANICAL CONTRACTOR.*

13 *MAKE CONNECTION TO NEW ELECTRIC HEATER. REUSE EXISTING CONDUIT AND WIRE TO THE GREATEST EXTENT POSSIBLE. EXTEND CIRCUITRY AS NECESSARY. COORDINATE WORK WITH MECHANICAL CONTRACTOR. WIRE SIZE AT LEAST 4-250KCMIL, 1-#4 IN A 2.5"C.*

14 *EXISTING PANEL HFG1A TO REMAIN. REMOVE AND REPLACE EXISTING 300A BREAKER WITH NEW 250A BREAKER FOR AHU-40 NEW ELECTRIC HEATER. MAINTAIN CIRCUITRY AND WIRING FOR NEW CONNECTION. REMOVE AND REPLACE EXISTING 50A BREAKER WITH NEW 70A BREAKER FOR AHU-40 NEW SUPPLY FAN. REPLACE CONDUIT AND WIRE. PROVIDE NEW 100A BREAKER IN 4X SG400 BREAKER SPACE TO POWER NEW PANEL HFG1A1. COORDINATE WITH PANEL MANUFACTURER. PANEL IS A GE SPECTRA SERIES UTILITY SWITCHBOARD. REFER TO ONE LINE DIAGRAM.*

FLOOR PLAN NOTES

15 *CONNECT EXISTING 120V WIRING MADE AVAILABLE DUE TO DEMOLITION TO POWER NEW AHU-40 CONTROLS AND LIGHITNG. FIELD VERIFY EXACT LOCATION. COORDINATE WORK WITH MECHANICAL CONTRACTOR.*

16 *EXISTING CARD READER TO REMAIN.*

17 *RELOCATED CARD READER. EXTEND CONDUIT AND WIRING TO NEW LOCATION AS REQUIRED.*

18 *HOMERUN WITH 4-#8 & 1-#10 GROUND WIRE IN A 3/4" CONDUIT.*

19 *MAKE POWER CONNECTION TO CIRC PUMP AND HOMERUN TO INDICATED PANEL. TERMINATE ON AN EXISTING SPARE BREAKER. IF NO SPARE IS AVAILABLE, PROVIDE AND INSTALL NEW 20AMP BREAKER IN AVAILABLE SPACE. FIELD VERIFY EXISTING PANEL CONDITION AND NOTIFY ARCHITECT/ENGINEER IF PROBLEMS ARE FOUND.*

20 *MAKE POWER CONNECTION TO AHU-40 LIGHTS AND CONTROL PANEL. COORDINATE NUMBER OF CONNECTIONS WITH MECHANICAL CONTRACTOR.*

1 **LEVEL 1 PLAN - SYSTEMS**
SCALE: 1/8" = 1'-0"

PGAV ARCHITECTS
PECKHAM GUYTON ALBERS & VIETS, INC.
1900 W.47th Place, #200, Westwood, KS 66205
(913) 362-6500 www.PGAV.COM

Copyright ©2015

STATE OF MISSOURI · DOMINICK J. JONES · NUMBER E-2001004656 · REGISTERED PROFESSIONAL ENGINEER · 7/3/19

THE SEAL AND SIGNATURE APPLY ONLY TO THE DOCUMENT TO WHICH THEY ARE AFFIXED AND DO NOT EXTEND TO ANY REVISIONS MADE TO THE DOCUMENT SUBSEQUENT TO THE DATE OF SIGNATURE. ESTIMATES, REPORTS, OR OTHER DOCUMENTS OR MATERIALS RELATED TO THE INTERPRETATION OR USE OF ANY OF THE PARTS OF THE ARCHITECTURAL OR ENGINEERING PROJECT.

#	DATE	DESCRIPTION

USKC EARLY CHILDHOOD EXHIBITS

SCIENCE CITY @ UNION STATION
30 W. PERSHING RD
KANSAS CITY, MO 64108

CONSTRUCTION DOCUMENTS

Original Size: 1 1/2" Drawing may have been reduced.

SYSTEMS PLAN

DATE:	07/03/2019
DRAWN: DVR	CHECKED: DVR
PGAV # 53494-00	CLIENT #
SHEET #	**E510**

bgr Consulting Engineers
Ph: 816.842.2800
Fx: 816.842.4864
CERTIFICATE OF AUTHORITY # 2006007202

6/28/2019 10:39:37 AM C:\Users\DominickD\Documents\r16\ 17-KSNorth Station-Elec_dhcarello.rvt

Branch Panel: P5.4

Location: | Volts: 120/208 Wye | A.I.C. Rating: 10,000
Supply From: | Phases: 3 | Mains Type: MLO
Mounting: Recessed | Wires: 4 | Mains Rating: 100 A
Enclosure: Type 1 | | MCB Rating:

CKT	Circuit Description	Trip	Poles	A	B	C	A	B	C	Poles	Trip	Circuit Description	CKT
1	MODEL TRAIN FLOOR BOXES	20 A	1	1500			1500			1	20 A	MODEL TRAIN FLOOR BOXES	2
3	MODEL TRAIN FLOOR BOXES	20 A	1		1500			500		1	20 A	SECONDARY INTRO SIGN	4
5	STATION CLOCK	20 A	1			500			500	1	20 A	FLIP DISK DISPLAY	6
7	MONITOR AND PLAYER	20 A	1	500			500			1	20 A	SEMAPHORE SIGNAL LIGHT	8
9	LOCO HEAD/MARKER LIGHT	20 A	1		1000			500		1	20 A	LOCO VIDEO PROJECTOR	10
11	LOCO TV, VIDEO PLAYER & LIGHTING	20 A	1			360			540	1	20 A	LOCO AUDIO PLAYER & PLC	12
13	MAIL CAR TABLET	20 A	1	180			500			1	20 A	LOAD IT MOTORS, BLOWER & PLC	14
15	LOAD IT MOTORS, BLOWER & PLC	20 A	1		500			500		1	20 A	LOAD IT MOTORS, BLOWER & PLC	16
17	HEART OF AMERICA TABLETS	20 A	1			540			360	1	20 A	SLEEPER MPEG PLAY & AMP	18
19	SLEEPER WINDOW EFFECTS	20 A	1	1500			360			1	20 A	ARRIVAL MPEG PLAY & AMP	20
21	DINING CAR DRUM HEAD LIGHT	20 A	1		500			500		1	20 A	LOAD IT MOTORS, BLOWER & PLC	22
23	LOAD IT MOTORS, BLOWER & PLC	20 A	1			500			500	1	20 A	LOAD IT MOTORS, BLOWER & PLC	24
25	AHU-40 CONTROLS & LIGHTS	20 A	1	500			1119			1	20 A	MODEL TRAIN ROOM TRACK LIGHTS	26
27	MODEL TRAIN ROOM TRACK LIGHTS	20 A	1		1110			95		1	20 A	SERVICE CORRIDOR LIGHTING	28
29	LIGHTING CONTROL PANEL	20 A	1			100			400	1	20 A	SLEEPER CAR LIGHT BOX	30
31	SLEEPER CAR LIGHTING	20 A	1	97			99			1	20 A	DINING CAR LIGHTING	32
33	MAIL CAR LIGHTING	20 A	1		70			85		1	20 A	BALLROOM LIGHTING	34
35													36
37													38
39													40
41													42
			Total Load:	8355 VA		6859 VA		4300 VA					

Load Classification	Connected Load	Demand Factor	Estimated Demand	Panel Totals	
Lighting	3079 VA	125.00%	3849 VA		
Other	2500 VA	100.00%	2500 VA	Total Conn. Load:	19419 VA
Power	13840 VA	86.13%	11920 VA	Total Est. Demand:	18269 VA
				Total Est. Demand Current:	51 A

NEW PANEL

Branch Panel: HFGK1

Location: | Volts: 480/277 Wye | A.I.C. Rating:
Supply From: MPG-F | Phases: 3 | Mains Type:
Mounting: Surface | Wires: 4 | Mains Rating: 150 A
Enclosure: Type 1 | | MCB Rating: 150 A

CKT	Circuit Description	Trip	Poles	A	B	C	A	B	C	Poles	Trip	Circuit Description	CKT
1				2833			4000						2
3	FPB-4	20 A	3		2833			4000		3	20 A	WH-1	4
5						2833			4000				6
7				1167			1833						8
9	FPB-6	20 A	3		1167			1833		3	20 A	FPB-5	10
11						1167			1833				12
13				3500			3167						14
15	FPB-2	20 A	3		3500			3167		3	20 A	FPB-9	16
17						3500			3167				18
19				1167			6833						20
21	FPB-1	20 A	3		1167			6833		3	40 A	FPB-7	22
23						1167			6833				24
25				2500			3500						26
27	FPB-3	20 A	3		2500			3500		3	20 A	FPB-8	28
29						2500			3500				30
31	CUH-1	20 A	1	2000			2000			1	20 A	CUH-4	32
33	CUH-3	20 A	1		2000			2000		1	20 A	CUH-2	34
35													36
37													38
39													40
41													42
			Total Load:	34500 VA		34500 VA		30500 VA					

Load Classification	Connected Load	Demand Factor	Estimated Demand	Panel Totals	
HVAC	87500 VA	100.00%	87500 VA	48	
Power	12000 VA	91.67%	11000 VA	Total Conn. Load:	99500 VA
				Total Est. Demand:	98500 VA
				Total Est. Demand Current:	118 A

NEW PANEL

ELECTRICAL CONTRACTOR SHALL OBTAIN HVAC SHOP DRAWINGS FROM MECHANICAL CONTRACTOR PRIOR TO ORDERING PANEL TO VERIFY REQUIRED BREAKER SIZES.

Branch Panel: HFG1A1

Location: | Volts: 480/277 Wye | A.I.C. Rating:
Supply From: HFG1A | Phases: 3 | Mains Type:
Mounting: Surface | Wires: 4 | Mains Rating: 100 A
Enclosure: Type 1 | | MCB Rating: 100 A

CKT	Circuit Description	Trip	Poles	A	B	C	A	B	C	Poles	Trip	Circuit Description	CKT
1				3500			3500						2
3	FPB-13	20 A	3		3500			3500		3	20 A	FPB-14	4
5						3500			3500				6
7				3500			3167						8
9	FPB-15	20 A	3		3500			3167		3	20 A	FPB-12	10
11						3500			3167				12
13				1833			1833						14
15	FPB-11	20 A	3		1833			1833		3	20 A	FPB-10	16
17						1833			1833				18
19													20
21													22
23													24
25													26
27													28
29													30
			Total Load:	17333 VA		17333 VA		17333 VA					

Load Classification	Connected Load	Demand Factor	Estimated Demand	Panel Totals	
HVAC	52000 VA	100.00%	52000 VA		
				Total Conn. Load:	52000 VA
				Total Est. Demand:	52000 VA
				Total Est. Demand Current:	63 A

NEW PANEL

ELECTRICAL CONTRACTOR SHALL OBTAIN HVAC SHOP DRAWINGS FROM MECHANICAL CONTRACTOR PRIOR TO ORDERING PANEL TO VERIFY REQUIRED BREAKER SIZES.

Branch Panel: P4.4

Location: | Volts: 120/208 Wye | A.I.C. Rating:
Supply From: | Phases: 3 | Mains Type: MLO
Mounting: Surface | Wires: 4 | Mains Rating: 225 A
Enclosure: Type 1 | | MCB Rating:

Note	CKT	Circuit Description	Trip	Poles	A	B	C	A	B	C	Poles	Trip	Circuit Description	CKT	Note
	1	EXISTING LOAD	0 A	1	0			0			1	0 A	EXISTING LOAD	2	
	3	EXISTING LOAD	0 A	1		0			0		1	0 A	EXISTING LOAD	4	
3	5	PAINT ROOM 201 HAND DRYER	20 A	1			1725			1080	1	20 A	GEN PURPOSE RECEPTS.	6	3
3	7	TODDLER EXP 203 HAND DRYER	20 A	1	1725			720			1	20 A	PRETEND PLAY 101 GEN RECPTS	8	3
	9	TODDLER EXP 203 CORD REEL	20 A	1		250			0		1	0 A	EXISTING LOAD	10	
4	11	UNDERCOUNTER REFRIG.	20 A	1			500			250	1	20 A	TODDLER EXP 203 CORD REEL	12	2
	13	EXISTING LOAD	0 A	1	0			250			1	20 A	TODDLER EXP 203 CORD REEL	14	
	15	EXISTING LOAD	0 A	1		0			0		1	0 A	EXISTING LOAD	16	
	17	EXISTING LOAD	0 A	1			0			0	1	0 A	EXISTING LOAD	18	
	19	EXISTING LOAD	0 A	1	0			0			1	0 A	EXISTING LOAD	20	
	21	EXISTING LOAD	0 A	1		0			500		1	20 A	PROGRAM FLOOR BOX	22	5
	23	EXISTING LOAD	0 A	1			0			540	1	20 A	TODDLER EXP 203 GEN. RECPTS	24	5
	25	EXISTING LOAD	0 A	1	0			325			1	20 A	WATERBED HEATER	26	6
1	27	FAMILY AMENITITES, RR, MOM RM LIGHTS	20 A	1		447			399		1	20 A	BABYSCAPE LIGHTS	28	1
	29	GROSS MOTOR LIGHTS	20 A	1			959			1268	1	20 A	GROSS MOTOR, PRETEND PLAY LIGHTS	30	
5	31	AQUARIUM	20 A	1	360			360			1	20 A	AQUARIUM	32	5
5	33	MARBLE MAZE	20 A	1		180			720		1	20 A	CAVE LIGHTING/DISPLAYS	34	5
5	35	DOORBELL	20 A	1			180			180	1	20 A	LIGHT TABLE	36	5
5	37	AIR TABLE	20 A	1	600			600			1	20 A	WIND TABLE	38	5
5	39	MICROWAVE	20 A	1		750			2055		2	25 A	DISHWASHER	40	5
	41	SPACE	--	--			0			2055				42	5
				Total Load:	4940 VA		5301 VA		8736 VA						

Load Classification	Connected Load	Demand Factor	Estimated Demand	Panel Totals	
Lighting	250 VA	125.00%	313 VA		
Other	6282 VA	100.00%	6282 VA	Total Conn. Load:	18987 VA
Power	12455 VA	90.14%	11228 VA	Total Est. Demand:	17822 VA
				Total Est. Demand Current:	49 A

EXISTING PANEL

1. REPLACE 2 POLE 30A FROM DEMO'D HEATER WITH (2) 1 POLE 20A 'SPARES' TO BE USED FOR NEW LOADS AS NECESSARY.
2. REPLACE 2 POLE 20A FROM DEMO'D HEATER WITH (2) 1 POLE 20A BREAKERS FOR NEW LOADS.
3. REPLACE 15A FROM DEMO'D FCUs WITH NEW 20A FOR NEW LOADS.
4. REPLACE 2 POLE 30A FROM DEMO'D WATER HEATER WITH (2) 1 POLE 20A FOR NEW LOADS.
5. PROVIDE NEW 20A BREAKER IN SPACE AVAILABLE.
6. CONNECT TO EXISTING SPARE BREAKER.

BREAKERS SHOWN AS EXISTING LOAD MAY BECOME AVAILABLE SPARES FOR AFTER DEMOLITION AND MAY BE USED FOR NEW LOADS SHOWN.

Branch Panel: P3.5

Location: | Volts: 120/208 Wye | A.I.C. Rating:
Supply From: | Phases: 3 | Mains Type: MCB
Mounting: Surface | Wires: 4 | Mains Rating: 125 A
Enclosure: Type 1 | | MCB Rating:

Note	CKT	Circuit Description	Trip	Poles	A	B	C	A	B	C	Poles	Trip	Circuit Description	CKT	Note
	1	EXISTING LOAD	0 A	1	0			0			1	0 A	EXISTING LOAD	2	
	3	EXISTING LOAD	0 A	1		0			0		1	0 A	EXISTING LOAD	4	
	5	EXISTING LOAD	0 A	1			0			0	1	0 A	EXISTING LOAD	6	
	7	EXISTING LOAD	0 A	1	0			0			1	0 A	EXISTING LOAD	8	
	9	EXISTING LOAD	0 A	1		0			0		1	0 A	EXISTING LOAD	10	
	11	EXISTING LOAD	0 A	1			0			0	1	0 A	EXISTING LOAD	12	
	13	EXISTING LOAD	0 A	1	0			0			1	0 A	EXISTING LOAD	14	
	15	EXISTING LOAD	0 A	1		0			0		1	0 A	EXISTING LOAD	16	
1	17	SPINNER TABLE POWER	20 A	1			500			500	1	20 A	SPINNER TABLE POWER	18	1
1	19	PROGRAM SPACE CORD REEL	20 A	1	250			500			1	20 A	SPINNER TABLE POWER	20	1
1	21	EVERBRIGHT DISPLAY	20 A	1		180			360		1	20 A	PROGRAM SPACE RECPTS	22	1
1	23	SAND TABLE LIGHTS	20 A	1			360			1725	1	20 A	PROGRAM SPACE HAND DRYER	24	1
				Total Load:	750 VA		540 VA		3085 VA						

Load Classification	Connected Load	Demand Factor	Estimated Demand	Panel Totals	
Other	1725 VA	100.00%	1725 VA		
Power	2650 VA	100.00%	2650 VA	Total Conn. Load:	4375 VA
				Total Est. Demand:	4375 VA
				Total Est. Demand Current:	12 A

EXISTING PANEL

1. PROVIDE NEW 20A BREAKER IN SPACE AVAILABLE.

BREAKERS SHOWN AS EXISTING LOAD MAY BECOME AVAILABLE SPARES FOR AFTER DEMOLITION AND MAY BE USED FOR NEW LOADS SHOWN.

Switchboard: HFG1A

Location: | Volts: 480/277 Wye | A.I.C. Rating:
Supply From: | Phases: 3 | Mains Type: MLO
Mounting: | Wires: 4 | Mains Rating:
Enclosure: | | MCB Rating: 400 A

Note	CKT	Circuit Description	# of Poles	Frame Size	Trip Rating	Load
1	1	AHU-40 HEATER	3	400 A	250 A	150000 VA
4	2	N.E. ELECTRIC HEATER	3	100 A	60 A	34000 VA
4	3	HUMIDIFIER	3	100 A	15 A	9900 VA
4	4	HEATER	3	100 A	60 A	34000 VA
2	5	AHU-40 SUPPLY FAN	3	100 A	70 A	35250 VA
3	6	HFG1A1	3	100 A	100 A	52000 VA
	7					
	8					
	9					
	10					
	11					
	12					
	13					
	14					
	15					
	16					
	17					
	18					
	19					
	20					
					Total Conn. Load:	315150 VA
					Total Amps:	379 A

Load Classification	Connected Load	Demand Factor	Estimated Demand	Panel Totals	
HVAC	315150 VA	100.00%	315150 VA		
				Total Conn. Load:	315150 VA
				Total Est. Demand:	315150 VA
				Total Conn. Current:	379 A
				Total Est. Demand...	379 A

EXISTING PANEL HFG1A NOTES

1. REPLACE EXISTING 300A BREAKER WITH NEW 200A TO POWER NEW HEATER IN AHU-40. MAINTAIN ALL WIRING FOR NEW CONNECTION.
2. REPLACE EXISTING 50A BREAKER WITH NEW 70A TO POWER NEW FAN IN AHU-40. REPLACE ALL ASSOCIATED CONDUIT AND WIRING.
3. PROVIDE AND INSTALL NEW 100A BREAKER TO POWER NEW PANEL HFG1A1 IN AVAILABLE SPACE.
4. EXISTING LOAD TO REMAIN.

Branch Panel: P4.5

Location: | Volts: 120/208 Wye | A.I.C. Rating:
Supply From: | Phases: 3 | Mains Type: MCB
Mounting: Recessed | Wires: 4 | Mains Rating: 125 A
Enclosure: Type 1 | | MCB Rating:

Note	CKT	Circuit Description	Trip	Poles	A	B	C	A	B	C	Poles	Trip	Circuit Description	CKT	Note
	1	EXISTING LOAD	0 A	1	0			0			1	0 A	EXISTING LOAD	2	
	3	EXISTING LOAD	0 A	1		0			0		1	0 A	EXISTING LOAD	4	
	5	EXISTING LOAD	0 A	1			0			0	1	0 A	EXISTING LOAD	6	
	7	EXISTING LOAD	0 A	1	0			0			1	0 A	EXISTING LOAD	8	
	9	EXISTING LOAD	0 A	1		0			0		1	0 A	EXISTING LOAD	10	
1	11	STAFF PREP AREA 205 RECPTS	20 A	1			540			578	1	20 A	PAINT & TODDLER ROOM LIGHTS	12	2
1	13	CP-1	20 A	1	125			1142			1	20 A	PROGRAM, SAND, VEST. LIGHTS	14	
	15	EXISTING LOAD	0 A	1		0			0		1	0 A	EXISTING LOAD	16	
	17	EXISTING LOAD	0 A	1			0			0	1	0 A	EXISTING LOAD	18	
	19	EXISTING LOAD	0 A	1	0			0			1	0 A	EXISTING LOAD	20	
	21	EXISTING LOAD	0 A	1		0			0		1	0 A	EXISTING LOAD	22	
	23	EXISTING LOAD	0 A	1			0			0	1	0 A	EXISTING LOAD	24	
				Total Load:	1267 VA		0 VA		1118 VA						

Load Classification	Connected Load	Demand Factor	Estimated Demand	Panel Totals	
Lighting	457 VA	125.00%	571 VA		
Other	1278 VA	100.00%	1278 VA	Total Conn. Load:	2400 VA
Power	665 VA	100.00%	665 VA	Total Est. Demand:	2514 VA
				Total Est. Demand Current:	7 A

EXISTING PANEL

1. REPLACE 15A FROM DEMO'D FCUs WITH NEW 20A FOR NEW LOADS.
2. REPLACE 2 POLE 15A FROM DEMO'D FCU'S WITH (2) 1 POLE 20A BREAKERS TO BE USED FOR NEW LOADS INDICATED.

BREAKERS SHOWN AS EXISTING LOAD MAY BECOME AVAILABLE SPARES FOR AFTER DEMOLITION AND MAY BE USED FOR NEW LOADS SHOWN.

Branch Panel: MPG-F

Location: | Volts: 480/277 Wye | A.I.C. Rating:
Supply From: | Phases: 3 | Mains Type: MLO
Mounting: Surface | Wires: 4 | Mains Rating: 600 A
Enclosure: Type 1 | | MCB Rating:

Note	CKT	Circuit Description	Trip	Poles	A	B	C	A	B	C	Poles	Trip	Circuit Description	CKT	Note
	1				33333			11333						2	
2	3	75 KVA TRANSFORMER	125 A	3		33333			11333		3	40 A	30 KVA TRANSFORMER	4	2
	5						33333			11333				6	
	7				34500			24000						8	
1	9	HFGK1	150 A	3		34500			24000		3	90 A	UNIT #9	10	2
	11						30500			24000				12	
	13	Space	--	--	0			5333						14	
	15	Space	--	--		0			5333		3	20 A	?	16	2
	17	Space	--	--			0			5333				18	
	19	Space	--	--	0			10667						20	
	21	Space	--	--		0			10667		3	40 A	AIR COMPRESSOR	22	2
	23	Space	--	--			0			10667				24	
	25	Space	--	--	0			8000						26	
	27	Space	--	--		0			8000		3	30 A	EWH	28	2
	29	Space	--	--			0			8000				30	
	31	Space	--	--	0			11333						32	
	33	Space	--	--		0			11333		3	60 A	NE ELEC. HEATER	34	2
	35	Space	--	--			0			11333				36	
				Total Load:	138500 VA		138500 VA		134500 VA						

Load Classification	Connected Load	Demand Factor	Estimated Demand	Panel Totals	
HVAC	399500 VA	100.00%	399500 VA		
Power	12000 VA	91.67%	11000 VA	Total Conn. Load:	411500 VA
				Total Est. Demand:	410500 VA
				Total Est. Demand Current:	494 A

EXISTING PANEL

1. PROVIDE NEW 3-POLE 150A BREAKER IN SPACE AVAILABLE.
2. EXISTING LOAD TO REMAIN.

PGAV ARCHITECTS
PECKHAM GUYTON ALBERS & VIETS, INC.
1900 W.47th Place, #300, Westwood, KS 66205
(913) 362-6500 www.PGAV.COM

Copyright ©2015

STATE OF MISSOURI
DOMINICK V. RUCERETO
NUMBER E-2001004656
7/3/19
REGISTERED PROFESSIONAL ENGINEER

THE SEAL AND SIGNATURE APPLY ONLY TO THE DOCUMENT TO WHICH THEY ARE AFFIXED, AND EXPRESSLY DISCLAIM ANY RESPONSIBILITY FOR ALL OTHER PLANS, SPECIFICATIONS, ESTIMATES, REPORTS, OR OTHER DOCUMENTS OR INSTRUMENTS RELATING TO OR INTENDED TO BE USED FOR ANY PART OR PARTS OF THE ARCHITECTURAL OR ENGINEERING PROJECT.

DATE DESCRIPTION

USKC EARLY CHILDHOOD EXHIBITS

SCIENCE CITY @ UNION STATION
30 W. PERSHING RD
KANSAS CITY, MO 64108

CONSTRUCTION DOCUMENTS

Original Size: 1 1/2" Drawing may have been reduced. 0" 1"

ELECTRICAL SCHEDULES

DATE: 07/03/2019
DRAWN: DVR | CHECKED: DVR
PGAV #: 53494-00 | CLIENT #:
SHEET #: **E710**

bgr Consulting Engineers
Ph: 816.842.2800
Fx: 816.842.4884
CERTIFICATE OF AUTHORITY # 2006007202

DVR
C:\Users\Dominick\Documents\(v16) 17-xUnion Station-Elec_drucereto.rvt
6/28/2019 10:39:38 AM

LIGHT FIXTURE SCHEDULE 1

Type	Manufacturer	Lamp	Voltage/Watts	Description
1A	HE WILLIAMS LT 2 2 L49 827 OR 830 AF DRV UNV OR APPROVED EQUAL	LED, 4869 LMN	120V/38W	2'x2' RECESSED LED TROFFER WITH .125" THICK FROSTED LENS AND ELECTRONIC DRIVER.
1C1	HALO H7RT 426 OR APPROVED EQUAL	3000 LMN	120V/28W	6" WIDE APERATURE WITH SPECULAR REFLECTOR CONE WITH TRIM RING. 0-5V DIMMING. COORDINATE WITH CONTROL SYSTEM. PROVIDE WITH WHITE CONE AND WHITE TRIM.
1E	PHILIPS CHLORIDE #CAX6	6V, 6W MR16	120V/16W	WALL MOUNT EMERGENCY FIXTURE WITH MAINTENANCE FREE SEALED LEAD ACID BATTERY AND SELF-DIAGNOSTIC/SELF-TEST CIRCUITRY.
1EX	LITHONIA LQC 2 R EL N OR EQUAL	LED	120V/5W	LED EXIT SIGN WITH RED LETTERS, DIE CAST ALUMINUM HOUSING, WHITE FINISH AND EMERGENCY BATTERY BACKUP PROVIDING 2-HOUR EMERGENCY RUN TIME. CONTRCTOR SHALL VERIFY EXACT MOUNTING, NUMBER OF FACES AND NUMBER OF CHEVRONS PRIOR TO ORDERING.
1P1	HE WILLIAMS RNDP-2-L25-835 FXA-DM1	LED 80CRI, 35K, 2,500LMN	120V/25W	2FT LED ROUND PENDANT MOUNT FIXTURE WITH WHITE ALUMINUM HOUSING, 1% DIMMING DRIVER AND FROSTED 0.125" THICK LENS. SUSPEND 24" BELOW CEILING
1P2	HE WILLIAMS RNDP-3-L67-835 FXA-DM1	LED 80CRI, 35K, 6,700LMN	120V/58W	3FT LED ROUND PENDANT MOUNT FIXTURE WITH WHITE ALUMINUM HOUSING, 1% DIMMING DRIVER AND FROSTED 0.125" THICK LENS. SUSPEND 6" BELOW CEILING.
1P3	HE WILLIAMS RNDP-3-L67-835 FXA-DM1	LED 80CRI, 35K, 6,700LMN	120V/58W	3FT LED ROUND PENDANT MOUNT FIXTURE WITH WHITE ALUMINUM HOUSING, 1% DIMMING DRIVER AND FROSTED 0.125" THICK LENS. SUSPEND 12" BELOW CEILING.
1P4	HE WILLIAMS RNDP-4-L136-835 FXA-DM1	LED 80CRI, 35K, 13,600LMN	120V/96W	4FT LED ROUND PENDANT MOUNT FIXTURE WITH WHITE ALUMINUM HOUSING, 1% DIMMING DRIVER AND FROSTED 0.125" THICK LENS. SUSPEND 6" BELOW CEILING.
1P5	HE WILLIAMS RNDP-4-L136-835 FXA-DM1	LED 80CRI, 35K, 13,600LMN	120V/96W	4FT LED ROUND PENDANT MOUNT FIXTURE WITH WHITE ALUMINUM HOUSING, 1% DIMMING DRIVER AND FROSTED 0.125" THICK LENS. SUSPEND 12" BELOW CEILING.
1P6	HE WILLIAMS RNDP-3-L67-835 FXA-DM1	LED 80CRI, 35K, 6,700LMN	120V/58W	3FT LED ROUND PENDANT MOUNT FIXTURE WITH WHITE ALUMINUM HOUSING, 1% DIMMING DRIVER AND FROSTED 0.125" THICK LENS. SUSPEND 24" BELOW CEILING.
1P7	HE WILLIAMS RNDP-4-L136-835 FXA-DM1	LED 80CRI, 35K, 13,600LMN	120V/96W	4FT LED ROUND PENDANT MOUNT FIXTURE WITH WHITE ALUMINUM HOUSING, 1% DIMMING DRIVER AND FROSTED 0.125" THICK LENS. SUSPEND 24" BELOW CEILING.
1P8	HE WILLIAMS RNDP-3-L67-835 FXA-DM1	LED 80CRI, 35K, 6,700LMN	120V/58W	3FT LED ROUND PENDANT MOUNT FIXTURE WITH WHITE ALUMINUM HOUSING, 1% DIMMING DRIVER AND FROSTED 0.125" THICK LENS. SUSPEND 18" BELOW CEILING.
1R1	H.E. WILLIAMS RNDS-2- L25-835-FXA-DIM1	LED 80 CRI, 35K 2,500LMN	120V/25W	2FT LED ROUND SURFACE MOUNT FIXTURE WITH WHITE ALUMINUM HOUSING, 1% DIMMING DRIVER AND FROSTED 0.125" THICK LENS.
1R2	H.E. WILLIAMS RNDS-3- L67-835-FXA-DIM1	LED 80 CRI, 35K 6,700LMN	120V/58W	3FT LED ROUND SURFACE MOUNT FIXTURE WITH WHITE ALUMINUM HOUSING, 1% DIMMING DRIVER AND FROSTED 0.125" THICK LENS.
1R3	H.E. WILLIAMS RNDS-4- L136-835-FXA-DIM1	LED 80 CRI, 35K 13,600LMN	120V/96W	4FT LED ROUND SURFACE MOUNT FIXTURE WITH WHITE ALUMINUM HOUSING, 1% DIMMING DRIVER AND FROSTED 0.125" THICK LENS.
1S1	LITHONIA # ZL1N L48 3000LM L/LENS MVOLT 35K 80CRI WH	LED	120V/25W	4' SUSPENDED LED STRIP FIXTURE WITH 11-GAUGE WHITE POWDER COAT WIREGUARD. PROVIDE WITH CHAIN HANGING KIT.
1T1	LSI TRACK #32330 TRACK HEAD #SSLCX38 TRACK HEAD #SCLCX30	LED 95CRI, 30K	120V/130W	24FT 120 VOLT 2-CIRCUIT WHITE SURFACE MOUNTED TRACK AND HEADS. PROVIDE 4 FLOOD TYPE SSLCX38 HEADS WITH PAR 38 LED REPLACEMENT HEAD SP30L-18-60D-930-03 18.5W AND 3 FLOOD TYPE SCLCX30 HEADS WITH PAR 38 LED REPLACEMENT HEAD SP30L-18-9D-830-03 18.5W WITH SNAP SYSTEM OF LENSES. PROVIDE ALL REQUIRED TRACK, FITTINGS, JOINERS, CAPS, ETC. FOR A COMPLETE AND OPERATIONAL SYSTEM. COORDINATE FINISHES WITH ARCHITECT PRIOR TO ORDERING. MOUNT TO 9'-0" CEILING.

LIGHTING CONTROL PANEL SCHEDULE

RELAY NO.	CIRCUIT NO.	VOLTAGE	CIRCUIT DESCRIPTION	CONTROL METHOD	LOAD TYPE	LOAD (W)(VA)
1	P5.4-30	120	SLEEPER CAR LIGHT BOXES	TC/WS	LED	400
2	P5.4-31	120	SLEEPER CAR LIGHTING	TC/WS	LED	100
3	P5.4-32	120	DINING CAR LIGHTING	TC/WS	LED	100
4	P5.4-33	120	MAIL CAR LIGHTING	TC/WS	LED	70
5	P5.4-34	120	BALL ROOM LIGHTING	TC/WS	LED	85
6	P5.4-4	120	SECONDARY INTRO SIGN	TC/WS	LED	500
7		120				
8		120				
9		120				
10		120				
11		120				
12		120				
13		120				
14		120				
15		120				
16		120				
17		120				
18		120				
19		120				
20		120				
21		120				
22		120				
23		120				
24		120				

CONTROL PANEL EQUAL TO: ETC ECHO ERP24-FTP24

ABBREVIATIONS:
CFL – COMPACT FLUORESCENT
ELV – ELECTRONIC LOW VOLTAGE
FL – FLUORESCENT
INC – INCANDESCENT
LED – LIGHT EMITTING DIODE
P – PLUG LOADS
MS – MOTOR STARTER
MON – LED MONITOR

CONTROL METHOD:
PH – PHOTOCELL CONTROLLED ON, PHOTOCELL CONTROLLED OFF
TC – RELAY OPENS AND CLOSES BASED ON OWNER DIRECTED TIME SCHEDULE
TC/WS – RELAY OPENS AND CLOSES BASED ON OWNER DIRECTED TIME SCHEDULE. REMOTE DIGITAL SWITCH TOGGLES THE RELAY OPEN AND CLOSED. MANUALLY CLOSING A RELAY THAT IS TIME SCHEDULED TO BE OFF WILL CAUSE THAT RELAY TO OPEN AFTER 90 MINUTES FOLLOWING A FLASH ALERT AT 85 MINUTES.

PGAV ARCHITECTS
PECKHAM GUYTON ALBERS & VIETS, INC.
1900 W.47th Place, #200, Westwood, KS 66205
(913) 362-6500 www.PGAV.COM
Copyright ©2015

STATE OF MISSOURI
DOMINICK V. RUCCELLO
NUMBER E-2001004656
7/3/19
REGISTERED PROFESSIONAL ENGINEER

THE SEAL AND SIGNATURE APPLY ONLY TO THE DOCUMENT TO WHICH THEY ARE AFFIXED AND DO NOT EXTEND RESPONSIBILITY FOR ALL OTHER PLANS, SPECIFICATIONS, ESTIMATES, REPORTS, OR OTHER DOCUMENTS OR INSTRUMENTS RELATIVE TO OR INTENDED TO BE A PART OR SUPPLEMENT TO THE ARCHITECTURAL OR ENGINEERING PROJECT.

#	DATE	DESCRIPTION

USKC EARLY CHILDHOOD EXHIBITS

SCIENCE CITY @ UNION STATION
30 W. PERSHING RD
KANSAS CITY, MO 64108

CONSTRUCTION DOCUMENTS

Original Size: 1 1/2" Drawing may have been reduced.
0" 1"

ELECTRICAL SCHEDULES

DATE: 07/03/2019
DRAWN: DVR | CHECKED: DVR
PGAV # 53494-00 | CLIENT #
SHEET #

E711

bgr Consulting Engineers
Ph: 816.842.2800
Fx: 816.842.4884
CERTIFICATE OF AUTHORITY # 2006007202

6/28/2019 10:39:39 AM C:\Users\Dominick\Documents\V16 17-42nen Station-Elec_dvcentr.rvt

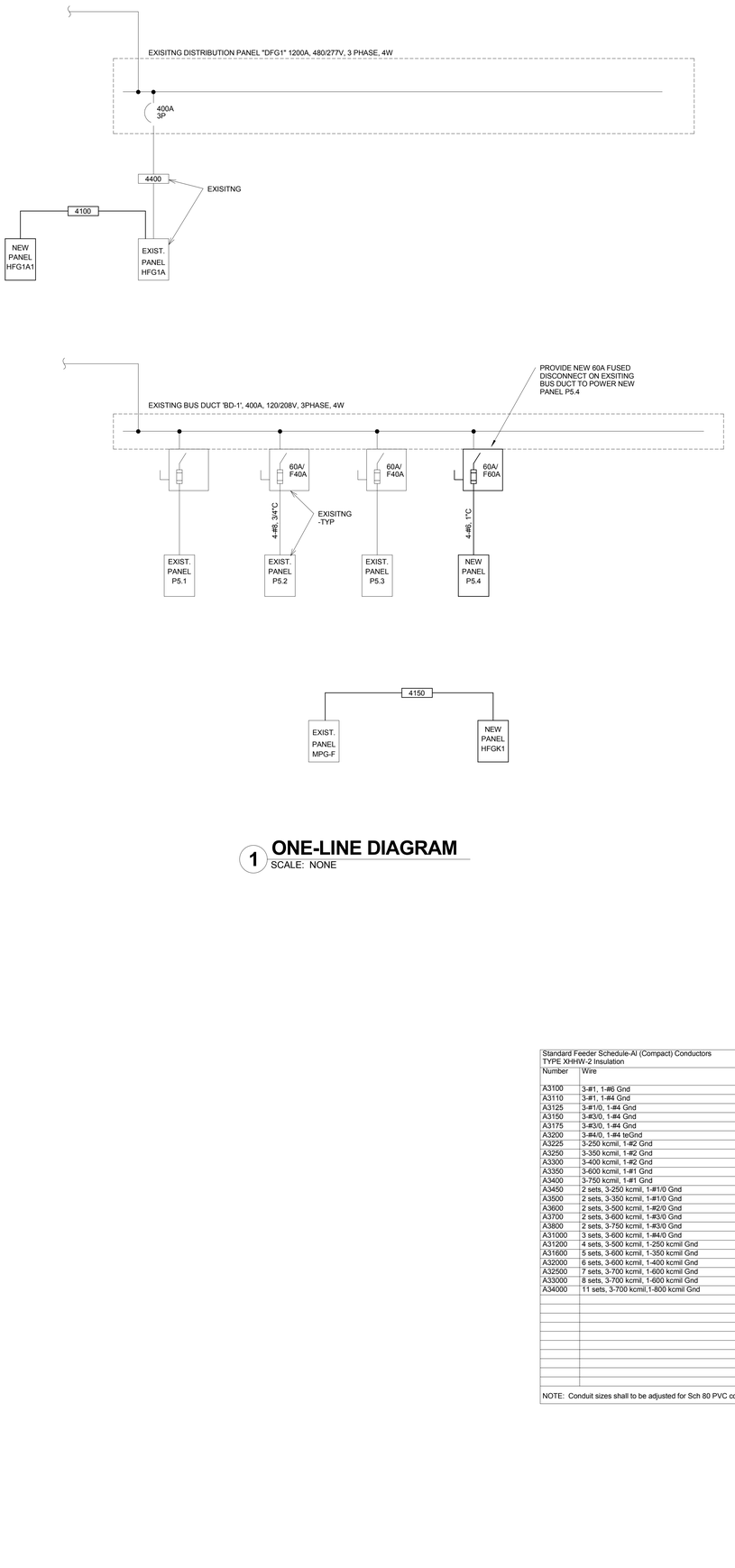

1 ONE-LINE DIAGRAM
SCALE: NONE

Standard Feeder Schedule-Al (Compact) Conductors
TYPE XHHW-2 Insulation

Number	Wire	EMT Conduit (English)	EMT Conduit (Metric)	Number	Wire	EMT Conduit (English)	EMT Conduit (Metric)
A3100	3-#1, 1-#6 Gnd	1 1/2" C	41	A4100	4-#1, 1-#6 Gnd	1 1/2" C	41
A3110	3-#1, 1-#4 Gnd	1 1/2" C	41	A5100	5-#1, 1-#6 Gnd	2" C	53
A3125	3-#1/0, 1-#4 Gnd	1 1/2" C	41	A4110	4-#1, 1-#4 Gnd	1 1/2" C	41
A3150	3-#3/0, 1-#4 Gnd	2" C	53	A4125	4-#1/0, 1-#4 Gnd	2" C	53
A3175	3-#3/0, 1-#4 Gnd	2" C	53	A4150	4-#3/0, 1-#4 Gnd	2" C	53
A3200	3-#4/0, 1-#4 teGnd	2" C	53	A5150	5-#3/0, 1-#4 Gnd	2 1/2" C	63
A3225	3-250 kcmil, 1-#2 Gnd	2 1/2" C	63	A4175	4-#3/0, 1-#4 Gnd	2" C	53
A3250	3-350 kcmil, 1-#2 Gnd	3" C	78	A4200	4-#4/0, 1-#4 Gnd	2 1/2" C	63
A3300	3-400 kcmil, 1-#2 Gnd	3" C	78	A4225	4-250 kcmil, 1-#2 Gnd	2 1/2" C	63
A3350	3-600 kcmil, 1-#1 Gnd	3 1/2" C	91	A5225	5-250 kcmil, 1-#2 Gnd	3" C	78
A3400	3-750 kcmil, 1-#1 Gnd	4"	103	A4250	4-350 kcmil, 1-#2 Gnd	3" C	78
A3450	2 sets, 3-250 kcmil, 1-#1/0 Gnd	2 1/2" C	63	A4300	4-400 kcmil, 1-#2 Gnd	3" C	78
A3500	2 sets, 3-350 kcmil, 1-#1/0 Gnd	2 1/2" C	63	A4350	4-600 kcmil, 1-#1 Gnd	4"	103
A3600	2 sets, 3-500 kcmil, 1-#2/0 Gnd	3" C	78	A4400	4-750 kcmil, 1-#1 Gnd	5"	129
A3700	2 sets, 3-600 kcmil, 1-#3/0 Gnd	3 1/2" C	91	A4450	2 sets, 4-250 kcmil, 1-#1/0 Gnd	2 1/2" C	63
A3800	2 sets, 3-750 kcmil, 1-#3/0 Gnd	4"	103	A4500	2 sets, 4-350 kcmil, 1-#1/0 Gnd	3" C	78
A31000	3 sets, 3-600 kcmil, 1-#4/0 Gnd	3 1/2" C	91	A4600	2 sets, 4-500 kcmil, 1-#2/0 Gnd	3 1/2" C	91
A31200	4 sets, 3-500 kcmil, 1-250 kcmil Gnd	3" C	78	A4700	2 sets, 4-600 kcmil, 1-#3/0 Gnd	4"	103
A31600	5 sets, 3-600 kcmil, 1-350 kcmil Gnd	3 1/2" C	91	A4800	2 sets, 4-750 kcmil, 1-#3/0 Gnd	5"	129
A32000	6 sets, 3-600 kcmil, 1-400 kcmil Gnd	3 1/2" C	91	A41000	3 sets, 4-600 kcmil, 1-#4/0 Gnd	4"	103
A32500	7 sets, 3-700 kcmil, 1-600 kcmil Gnd	3 1/2" C	91	A41200	4 sets, 4-500 kcmil, 1-250 kcmil Gnd	3" C	78
A33000	8 sets, 3-700 kcmil, 1-600 kcmil Gnd	3 1/2" C	91	A41600	5 sets, 4-600 kcmil, 1-350 kcmil Gnd	4"	103
A34000	11 sets, 3-700 kcmil,1-800 kcmil Gnd	3 1/2" C	91	A42000	6 sets, 4-600 kcmil, 1-400 kcmil Gnd	4"	103
				A42500	7 sets, 4-700 kcmil, 1-600 kcmil Gnd	4"	103
				A43000	8 sets, 4-700 kcmil, 1-600 kcmil Gnd	4"	103
				A44000	11 sets, 4-700 kcmil,1-800 kcmil Gnd	4"	103
				A45000	14 sets, 4-750 kcmil,2-600 kcmil CU. Gnd	5"	129

NOTE: Conduit sizes shall to be adjusted for Sch 80 PVC conduit. Compact AL MC Cable feeders are acceptable.

Standard CU. Feeder Schedule
TYPE THHW-2 / THWN-2 Insulation

Number	Wire	EMT Conduit (English)	EMT Conduit (Metric)	Number	Wire	EMT Conduit (English)	EMT Conduit (Metric)
320	3-#12, 1-#12 Gnd	3/4" C	21	420	4-#12, 1-#12 Gnd	3/4" C	21
330	3-#10, 1-#10 Gnd	3/4" C	21	430	4-#10, 1-#10 Gnd	3/4" C	21
340	3-#8, 1-#10 Gnd	3/4" C	21	440	4-#8, 1-#10 Gnd	3/4" C	21
350	3-#8, 1-#10 Gnd	3/4" C	21	450	4-#8, 1-#10 Gnd	3/4" C	21
360	3-#6, 1-#10 Gnd	1" C	27	460	4-#6, 1-#10 Gnd	1" C	27
370	3-#6, 1-#8 Gnd	1" C	27	470	4-#6, 1-#8 Gnd	1" C	27
380	3-#4, 1-#8 Gnd	1 1/4" C	35	480	4-#4, 1-#8 Gnd	1 1/4" C	35
390	3-#4, 1-#8 Gnd	1 1/4" C	35	490	4-#4, 1-#8 Gnd	1 1/4" C	35
3100	3-#3, 1-#8 Gnd	1 1/4" C	35	4100	4-#3, 1-#8 Gnd	1 1/4" C	35
3110	3-#2, 1-#6 Gnd	1 1/2" C	41	4110	4-#2, 1-#6 Gnd	1 1/2" C	41
3125	3-#1, 1-#6 Gnd	1 1/2" C	41	4125	4-#1, 1-#6 Gnd	2" C	53
3150	3-#1/0, 1-#6 Gnd	1 1/2" C	41	4150	4-#1/0, 1-#6 Gnd	2" C	53
3175	3-#2/0, 1-#6 Gnd	2" C	53	4175	4-#2/0, 1-#6 Gnd	2" C	53
3200	3-#3/0, 1-#6 Gnd	2" C	53	4200	4-#3/0, 1-#6 Gnd	2" C	53
3225	3-#4/0, 1-#4 Gnd	2 1/2" C	63	4225	4-#4/0, 1-#4 Gnd	2 1/2" C	63
				5225	5-#4/0, 1-#4 Gnd	2 1/2" C	63
3250	3-250 kcmil, 1-#4 Gnd	2 1/2" C	63	4250	4-250 kcmil, 1-#4 Gnd	2 1/2" C	63
3300	3-350 kcmil, 1-#4 Gnd	3" C	78	4300	4-350 kcmil, 1-#4 Gnd	3" C	78
3350	3-400 kcmil, 1-#3 Gnd	3" C	78	4350	4-400 kcmil, 1-#3 Gnd	3" C	78
3400	3-500 kcmil, 1-#3 Gnd	3 1/2" C	91	4400	4-500 kcmil, 1-#3 Gnd	3 1/2" C	91
3450	2 sets, 3-#4/0, 1-#3 Gnd	2 1/2" C	63	4450	2 sets, 4-#4/0, 1-#3 Gnd	2 1/2" C	63
3500	2 sets, 3-250 kcmil, 1-#2 Gnd	2 1/2" C	63	4500	2 sets, 4-250 kcmil, 1-#2 Gnd	2 1/2" C	63
3600	2 sets, 3-350 kcmil, 1-#1 Gnd	3" C	78	4600	2 sets, 4-350 kcmil, 1-#1 Gnd	3" C	78
3700	2 sets, 3-400 kcmil, 1-#1/0 Gnd	3" C	78	4700	2 sets, 4-400 kcmil, 1-#1/0 Gnd	3" C	78
3800	2 sets, 3-500 kcmil, 1-#1/0 Gnd	3 1/2" C	91	4800	2 sets, 4-500 kcmil, 1-#1/0 Gnd	3 1/2" C	91
31000	3 sets, 3-400 kcmil, 1-#2/0 Gnd	3" C	78	41000	3 sets, 4-400 kcmil, 1-#2/0 Gnd	3" C	78
31200	4 sets, 3-350 kcmil, 1-#3/0 Gnd	3" C	78	41200	4 sets, 4-350 kcmil, 1-#3/0 Gnd	3" C	78
31600	5 sets, 3-400 kcmil, 1-#4/0 Gnd	3" C	78	41600	5 sets, 3-400 kcmil, 1-#4/0 Gnd	3" C	78
32000	6 sets, 3-400 kcmil, 1-250 kcmil Gnd	3" C	78	42000	6 sets, 4-400 kcmil, 1-250 kcmil Gnd	3" C	78
32500	7 sets, 3-500 kcmil, 1-350 kcmil Gnd	3 1/2" C	91	42500	7 sets, 4-500 kcmil, 1-350 kcmil Gnd	3 1/2" C	91
33000	8 sets, 3-500 kcmil, 1-400 kcmil Gnd	3 1/2" C	91	43000	8 sets, 4-500 kcmil, 1-400 kcmil Gnd	3 1/2" C	91
34000	11sets, 3-500 kcmil, 1-500 kcmil Gnd	3 1/2" C	91	44000	11 sets, 4-500 kcmil, 1-500 kcmil Gnd	3 1/2" C	91
				45000	14 sets, 4-500 kcmil, 1-700 kcmil Gnd	3 1/2" C	91

NOTE: Conduit sizes may need to be adjusted for PVC conduit.

PGAV ARCHITECTS
PECKHAM GUYTON ALBERS & VIETS, INC.
1900 W.47th Place, #200, Westwood, KS 66205
(913) 362-6500 www.PGAV.COM
Copyright ©2015

STATE OF MISSOURI
DOMINICK R. VIVION
NUMBER E-2001004656
7/3/19
REGISTERED PROFESSIONAL ENGINEER

THE SEAL AND SIGNATURE APPLY ONLY TO THE DOCUMENT TO WHICH THEY ARE AFFIXED. THE ENGINEER ASSUMES NO RESPONSIBILITY FOR ALL OTHER PLANS, SPECIFICATIONS, ESTIMATES, REPORTS, OR OTHER DOCUMENTS OR INSTRUMENTS RELATING TO OR PREPARED OR ASSEMBLED BY OTHERS OR PARTS OF THE ARCHITECTURAL OR ENGINEERING PROJECT.

#	DATE	DESCRIPTION

USKC EARLY CHILDHOOD EXHIBITS

SCIENCE CITY @ UNION STATION
30 W. PERSHING RD
KANSAS CITY, MO 64108

CONSTRUCTION DOCUMENTS

Original Size: 1 1/2" Drawing may have been reduced.
0" 1"

ELECTRICAL ONE-LINE DIAGRAM

DATE: 07/03/2019
DRAWN: DVR
CHECKED: DVR
PGAV # 53494-00
CLIENT #
SHEET # **E810**

bgr Consulting EngineerS
Ph: 816.842.2800
Fx: 816.842.4884
CERTIFICATE OF AUTHORITY # 2006007202

6/28/2019 10:39:40 AM C:\Users\Dominick\Documents\v16\ 17-42nen Station Elec_dvivenkb.rvt

DVR

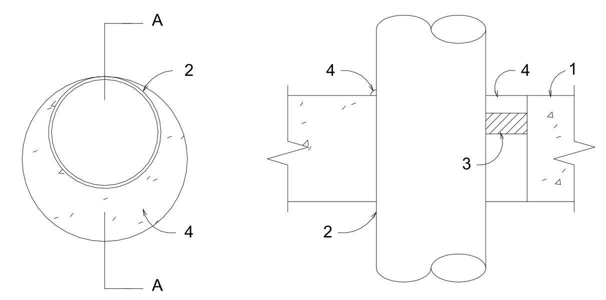

SECTION A-A

SYSTEM NO. 49

F RATINGS - 2 AND 3 HR. (SEE ITEM 2A)
T RATING - O HR.

1.) FLOOR OR WALL ASSEMBLY - MINIMUM 4 1/2" THICK LIGHTWEIGHT OR NORMAL WEIGHT (100-150 PCF) CONCRETE. WALL ASSEMBLY MAY ALSO BE CONSTRUCTED OF ANY UL CLASSIFIED CONCRETE BLOCKS. MAXIMUM DIAMETER OF CIRCULAR THROUGH OPENING IS 22 1/2".
SEE CONCRETE BLOCK (CAZT) CATEGORY IN FIRE RESISTANCE DIRECTORY FOR NAMES OF MANUFACTURERS.

1A.) STEEL SLEEVE - (OPTIONAL, NOT SHOWN) - NOMINAL 12" DIAMETER (OR SMALLER) SCHEDULE 40 (OR HEAVIER) STEEL PIPE SLEEVE CAST INTO CONCRETE FLOOR OR WALL. SLEEVE TO BE FLUSH WITH OR PROJECT MAX 2" FROM TOP SURFACE OF FLOOR OR FROM BOTH SURFACES OF WALL.

2.) PIPE OR CONDUIT - NOMINAL 20" DIAMETER (OR SMALLER) SCHEDULE 10S (OR HEAVIER) STEEL PIPE, NOMINAL 6" DIAMETER (OR SMALLER) RIGID STEEL CONDUIT, NOMINAL 6" DIAMETER (OR SMALLER) TYPE L (OR HEAVIER) COPPER TUBE, NOMINAL 4" DIAMETER. (OR SMALLER) CAST IRON PIPE OR NOMINAL. 4" DIAMETER. (OR SMALLER) STEEL EMT. MAXIMUM ONE PIPE OR CONDUIT PER THROUGH OPENING. MAXIMUM ANNULAR SPACE BETWEEN PIPE OR CONDUIT AND EDGE OF THROUGH OPENING IS ZERO IN (POINT CONTACT). PIPE OR CONDUIT TO BE RIGIDLY SUPPORTED ON BOTH SIDES OF FLOOR OR WALL ASSEMBLY.

2A.) STEEL VENT DUCT - (NOT SHOWN) - AS AN ALTERNATE TO THE PIPE OR CONDUIT, NOMINAL 4" DIAMETER (OR SMALLER) NO. 28 GAUGE (OR HEAVIER) GALVANIZED STEEL VENT DUCT MAY BE USED IN THROUGH OPENINGS OF FLOOR ASSEMBLIES PROVIDED MAXIMUM ANNULAR SPACE DOES NOT EXCEED 7/8". WHEN STEEL VENT DUCT IS USED, F RATING IS 2 HRS.

3.) PACKING MATERIAL - POLYETHYLENE BACKER ROD OR NOMINAL 1" THICKNESS OF TIGHTLY-PACKED CERAMIC (ALUMINA SILICA) FIBER BLANKET, MINERAL-WOOL BATT OF GLASS FIBER INSULATION MATERIAL USED AS A PERMANENT FORM. PACKING MATERIAL TO BE RECESSED FROM TOP SURFACE OF FLOOR OR FROM BOTH SURFACES OF WALL AS REQUIRED TO ACCOMMODATE THE REQUIRED THICKNESS OF CAULK FILL MATERIAL (ITEM 4). AS AN ALTERNATE WHEN MAXIMUM PIPE SIZE IS 10" DIAMETER AND WHEN MAXIMUM ANNULAR SPACE IS 1" OR LESS, A MINIMUM 1" THICKNESS OF TIGHTLY-PACKED CERAMIC FIBER BLANKET OR MINERAL-WOOL BATT PACKING MATERIAL MAY BE RECESSED MINIMUM 1/2" FROM BOTTOM SURFACE OF FLOOR OR FROM EITHER SIDE OF WALL.

4.) FILL, VOID OR CAVITY MATERIALS* -CAULK- APPLIED TO FILL THE ANNULAR SPACE TO THE MINIMUM THICKNESS SHOWN IN THE FOLLOWING TABLE:

MAXIMUM PIPE DIAMETER. (IN.)	MAXIMUM ANNULAR SPACE (IN.)	PACKING MATERIAL TYPE (a)	MINIMUM CAULK THICKNESS (IN.)
10	1	BR, CF, GF or MW	1/2 (b)
10	1	CF or MW	1/2 (C)
20	2 1/2	BR, CF, GF or MW	1 (b)

(a.) BR = POLYETHYLENE BACKER ROD.
CF = CERAMIC FIBER BLANKET.
GF = GLASS FIBER INSULATION.
MW = MINERAL-WOOL BATT.
(b.) CAULK INSTALLED FLUSH WITH TOP SURFACE OF FLOOR OR BOTH SURFACE OF WALL.
(c.) CAULK INSTALLED FLUSH WITH BOTTOM SURFACE OF FLOOR OR ONE SURFACE OF WALL.

* BEARING THE UL CLASSIFICATION MARKING

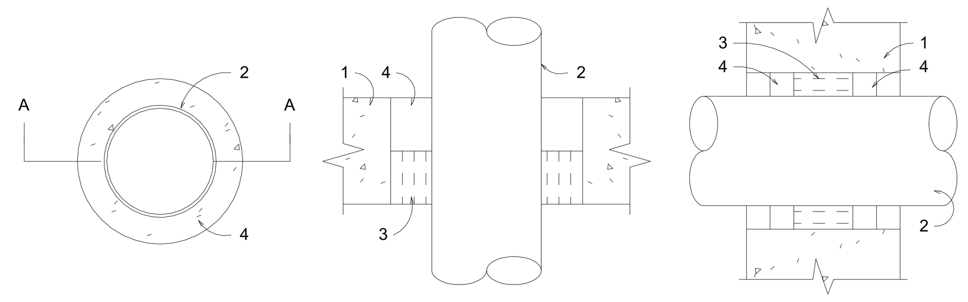

SECTION A-A
(FLOOR ASSEMBLY)

SECTION A-A
(WALL ASSEMBLY)

SYSTEM NO. CAJ1012

(FORMERLY SYSTEM NO. 129)
F RATINGS - 1 HR.
T RATING - O HR.

1.) FLOOR OR WALL ASSEMBLY - MINIMUM 5" THICK REINFORCED NORMAL WEIGHT (100 - 150 PCF) CONCRETE. WALL MAY ALSO BE CONSTRUCTED OF ANY UL CLASSIFIED CONCRETE BLOCKS*. MAXIMUM DIAMETER OF OPENING IS 6".
SEE CONCRETE BLOCKS (CAZT) CATEGORY IN THE FIRE RESISTANCE DIRECTORY FOR NAMES OF MANUFACTURERS.

2.) THROUGH PENETRANTS - ONE METALLIC PIPE OR CONDUIT TO BE CENTERED WITHIN THE FIRESTOP SYSTEM. A NOMINAL ANNULAR SPACE OF /4" IS REQUIRED WITHIN THE FIRESTOP SYSTEM. PIPE OR CONDUIT TO BE RIGIDLY SUPPORTED ON BOTH SIDES OF FLOOR OR WALL ASSEMBLY. THE FOLLOWING TYPES AND SIZES OF METALLIC PIPES OR CONDUITS MAY BE USED:
A. STEEL PIPE - NOMINAL 4" DIAMETER (OR SMALLER) SCHEDULE 5 (OR HEAVIER) STEEL PIPE
B. CONDUIT - NOMINAL 4" DIAMETER (OR SMALLER) ELECTRICAL METALLIC TUBING OR STEEL CONDUIT.

3.) PACKING MATERIAL - MINIMUM 3" THICKNESS OF MINIMUM 4.4 PCF MINERAL WOOL BATT INSULATION FIRMLY PACKED INTO OPENING AS A PERMANENT FORM. PACKING MATERIAL TO BE RECESSED FROM TOP SURFACE OF FLOOR AS REQUIRED TO ACCOMMODATE THE REQUIRED THICKNESS OF FILL MATERIAL. PACKING MATERIAL TO BE CENTERED IN WALL'S MID-DEPTH AND RECESSED TO ALLOW FOR INSTALLATION OF FILL MATERIAL.

4.) FILL, VOID OR CAVITY MATERIAL* - SEALANT OR FOAM - MINIMUM 1/2" THICKNESS OF FILL MATERIAL APPLIED WITHIN ANNULUS, FLUSH WITH TOP SURFACE OF FLOOR. IN WALL, FILL MATERIAL TO BE APPLIED ON EACH SIDE OF PACKING MATERIAL. FOAMED SILICONE TO BE INSTALLED AS DESCRIBED IN THE MANUFACTURER'S APPLICATION INSTRUCTIONS AT A DENSITY OF 14 PCF MINIMUM TO 21 PCF MAXIMUM. THE THICKNESS OF FILL MATERIAL IS DEPENDENT UPON THE TYPE OF FILL MATERIAL AS SHOWN IN THE TABLE BELOW.

FILL MATERIAL IDENTIFICATION	MINIMUM THICK OF FILL MATERIAL, (IN.)
TYPE FS FOAM	1
TYPE FS SEALANT OR FS SEALANT SL	1/2

DOW CORNING CORP. - TYPES FS SEALANT, FS SEALANT SL (FLOOR ONLY) OR FS FOAM
* BEARING THE UL CLASSIFICATION MARKING.

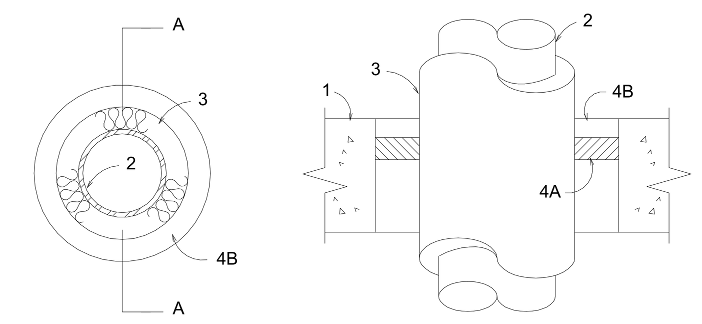

SECTION A-A

SYSTEM NO. CAJ5001

(FORMERLY SYSTEM NO. 91)
F RATINGS - 1-1/2, 2 AND 3 HR. (SEE ITEM 4)
T RATINGS - O, 1/2, 3/4 AND 1 HR. (SEE ITEMS 1A AND 4)
L RATING AT AMBIENT - 2 CFM/SQ. FT. (SEE ITEM 4B)
L RATING AT 400°F - LESS THAN 1 CFM/SQ. FT. (SEE ITEM 4B)

1). FLOOR OR WALL ASSEMBLY - MIN. 2 1/2" THICK REINFORCED LIGHTWEIGHT OR NORMAL WEIGHT (100 150 PCF) CONCRETE. WALL MAY ALSO BE CONSTRUCTED OF ANY UL CLASSIFIED CONCRETE BLOCKS*. MAX. DIAMETER OF OPENING IS 18".
SEE CONCRETE BLOCKS (CAZT) AND PRECAST CONCRETE UNITS (CFTV) CATEGORIES IN THE FIRE RESISTANCE DIRECTORY FOR NAMES OF MANUFACTURERS.

1A). STEEL SLEEVE - (OPTIONAL, NOT SHOWN) - NOM. 9" (OR SMALLER) SCHEDULE 10 (OR HEAVIER) STEEL SLEEVE CAST OR GROUTED INTO FLOOR OR WALL ASSEMBLY. SLEEVE MAY EXTEND A MAX. OF 2" ABOVE TOP OF FLOOR OR BEYOND EITHER SURFACE OF WALL. SLEEVE MAY BE USED ONLY WHEN FLOOR OR WALL ASSEMBLY IN MIN. 4 1/2" THICK. T RATING IS 0 HR WHEN SLEEVE IS USED.

2). PIPE - NOM. 4" DIAMETER (OR SMALLER) TYPE L (OR HEAVIER) COPPER PIPE, NOM. 12" DIAMETER (OR SMALLER) SERVICE WEIGHT (OR HEAVIER) CAST IRON SOIL PIPE, NOM. 12" DIAMETER (OR SMALLER) CLASS 50 (OR HEAVIER) DUCTILE IRON PRESSURE PIPE OR NOM. 12" DIAMETER (OR SMALLER) SCHEDULE 10 (OR HEAVIER) STEEL PIPE CENTERED IN THE OPENING AND RIGIDLY SUPPORTED ON BOTH SIDES OF THE FLOOR OR WALL ASSEMBLY.

3). PIPE COVERING - NOM. 1" OR 2" THICK HOLLOW CYLINDRICAL HEAVY DENSITY (MIN. 3.5 PCF) GLASS FIBER UNITS JACKETED ON THE OUTSIDE WITH AN ALL SERVICE JACKET. LONGITUDINAL JOINTS SEALED WITH METAL FASTENERS OR FACTORY-APPLIED SELF-SEALING LAP TAPE. TRANSVERSE JOINTS SECURED WITH METAL FASTENERS OR WITH BUTT STRIP TAPE SUPPLIED WITH THE PRODUCT.
SEE PIPE AND EQUIPMENT COVERING-MATERIALS* (BRGU) CATEGORY IN BUILDING MATERIALS DIRECTORY FOR NAMES OF MANUFACTURERS. ANY PIPE COVERING MATERIAL MEETING THE ABOVE SPECIFICATIONS AND BEARING THE UL CLASSIFICATION MARKING WITH A FLAME SPREAD INDEX OF 25 OR LESS AND A SMOKE DEVELOPED INDEX OF 50 OR LESS MAY BE USED.

4). FIRESTOP SYSTEM - THE DETAILS OF THE FIRESTOP SYSTEM SHALL BE AS FOLLOWS:
A. PACKING MATERIAL - MIN. 1" THICKNESS OF FIRMLY PACKED MINERAL WOOL BATT INSULATION USED AS A PERMANENT FORM. PACKING MATERIAL TO BE RECESSED FROM TOP OF SURFACE OF FLOOR OR FROM BOTH SURFACES OF WALL AS RE-QUIRED TO ACCOMMODATE THE REQUIRED THICKNESS OF CAULK FILL MATERIAL (ITEM B).
B. FILL, VOID OR CAVITY MATERIAL* -CAULK- APPLIED TO FILL THE ANNULAR SPACE FLUSH WITH THE TOP SURFACE OF THE FLOOR OR FLUSH WITH BOTH SURFACES OF WALL. WHEN NOM. PIPE COVERING THICKNESS IS 2", MIN. THICKNESS OF CAULK FILL MATERIAL IN 1". THE HOURLY F AND T RATINGS OF THE FIRESTOP SYSTEM ARE DEPENDENT UPON THE THICKNESS OF THE FLOOR OR WALL, THE SIZE OF PIPE, THE THICKNESS OF PIPE COVERING MATERIAL, THE SIZE OF THE ANNULAR SPACE (BETWEEN THE PIPE COVERING MATERIAL AND THE EDGE OF THE CIRCULAR THROUGH OPENING) AND THE FILL MATERIAL TYPE, AS SHOWN IN THE FOLLOWING TABLE:

MIN. FLOOR OR WALL THICKNESS, IN.	MAX. PIPE DIAM., IN.	NOM. PIPE COVERING THICKNESS, IN.	ANNULAR SPACE, IN.	CAULK FILL MATERIAL TYPE	F RATING, HR	T RATING, HR
2-1/2	4	1	5/8 TO 7/8	CP-25 N/S, CP-25 S/L OR CP-25 WB	2	1
4-1/2	4	1	3/4 TO 1	CP-25 N/S, CP-25 S/L	3	1
4-1/2	4	2	1-1/2 TO 2	CP-25 N/S, CP-25 S/L OR CP-25 WB	2	1-1/2
2-1/2	12	1	5/8 TO 1	CP-25 N/S, CP-25 S/L	2	0
2-1/2	12	1	1/2 TO 1-1/2	CP-25 WB+	2	1/2
4-1/2	12	1	1 TO 1-1/2	CP-25 N/S, CP-25 S/L	2	1/2
4-1/2	12	1	1/2 TO 2-3/8	CP-25 WB+	3	1

MINNESOTA MINING & MFG. CO.-TYPES CP-25 S/L, CP-25 N/S, CP-25 WB, CP-25 WB+.
(NOTE: L RATINGS APPLY ONLY WHEN TYPE CP-25 WB+ CAULK IS USED.)
* BEARING THE UL CLASSIFICATION MARKING

1 FIRE STOPPING DETAIL

SCALE: NONE

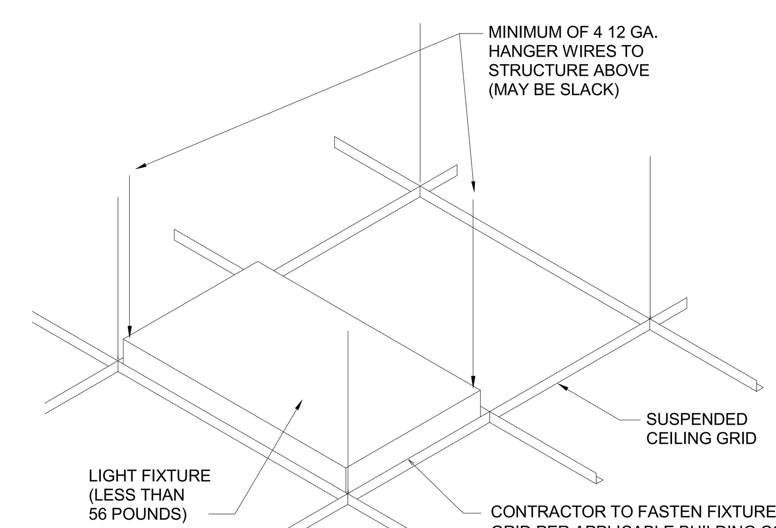

2 LIGHT FIXTURE DETAIL

SCALE: NONE

GENERAL NOTES (TYPICAL ALL SHEETS)

A) REFER TO ARCHITECTS REFLECTED CEILING PLANS FOR EXACT PLACEMENT OF LIGHT FIXTURES, SPEAKER AND F.A. DEVICES IN THE CEILING SYSTEM.

B) CONTRACTOR SHALL REFER TO ARCHITECTS DETAILS AND ELEVATIONS FOR COORDINATION OF LOCATION OF ALL WIRING DEVICES BEFORE ROUGH-IN OF J-BOXES.

C) REFER TO ARCHITECTS PLANS FOR DETAIL OF ALL CONDUIT THRU ROOF PENETRATIONS.

D) UPDATED, TYPEWRITTEN PANELBOARD DIRECTORY SHALL BE PROVIDED FOR EACH PANELBOARD THAT CIRCUITS HAVE BEEN ADDED TO OR MODIFIED.

E) ALL LIGHT FIXTURES SHALL BE SUPPORTED PER UBC STANDARD 47-18 WITH A MINIMUM OF (4) 12 GA. HANGER WIRES TO STRUCTURE ABOVE.

F) EXIT AND EMERGENCY LIGHTS SHALL BE CONNECTED TO HOT LEG, NOT SWITCH LEG.

G) CONTRACTOR SHALL COORDINATE INSTALLATION REQUIREMENTS AND SCHEDULING OF ALL SYSTEM FURNITURE WITH FURNITURE INSTALLER.

H) DISCONNECTS FOR MECHANICAL EQUIPMENT ARE PROVIDED BY OTHERS. UNLESS NOTED OTHERWISE.

I) FIRE ALARM IS A DESIGN BUILD SCOPE. THE FIRE ALARM CONTRACTOR SHALL SUBMIT STAMPED DESIGN/CONSTRUCTION DRAWINGS TO THE CITY AND ARCHITECT FOR REVIEW. THE CONTRACTOR SHALL INCLUDE IN BID ALL COSTS ASSOCIATED WITH FIRE ALARM MODIFICATIONS. THIS WORK SHALL INCLUDE POWER EXTENDER PANEL, SMOKE DETECTORS, HORN/STROBES, PULL STATIONS, REMOTE INDICATING LIGHTS AND ANY OTHER FIRE ALARM WORK SHOWN ON PLANS. ALL WIRING, PLENUM RATED CABLING, BETWEEN DEVICES SHALL BE INCLUDED IN WORK TO PROVIDE AN OPERATIONAL EXTENSION OF THE EXISTING FIRE ALARM SYSTEM.

J) CONTRACTOR SHALL ALIGN ALL WIRING DEVICES IN VERTICAL ALIGNMENT. IF ANY DEVICE(S) ARE FOUND NOT TO BE INSTALLED PER DETAIL CONTRACTOR SHALL RELOCATE AND PAY ALL ASSOCIATED COSTS ASSOCIATED WITH THE RELOCATION(S).

K) EXCEPT AS OTHERSIWSE NOTED OR APPROVED BY THE ARCHITECT THE CONTRACTOR SHALL INSTALL, ELECTRICAL FEEDER AND BRANCH CIRCUIT RACEWAYS IN A CONCEALED MANNER THROUGHOUT THEIR ROUTING. ROUTING PATHS AND METHODS SHALL BE COORDINATED WITH AND APPROVED BY THE ARCHITECT PRIOR TO INSTALLING RACEWAYS.

ELECTRICAL SYMBOLS

	BRANCH CIRCUIT CONCEALED IN CEILING OR WALL. ARROWS INDICATE HOMERUNS TO PANEL. ALL CONDUCTORS ARE #12 EXCEPT AS NOTED.
	CONDUIT RUN UNDERGROUND OR CONCEALED IN FLOOR SLAB. ALL CONDUIT 3/4" EXCEPT AS NOTED
	GROUNDING CONDUCTOR #12 EXCEPT AS NOTED
OR	EXIT LIGHT - SINGLE FACED - ARROWS AS SHOWN
	EXIT LIGHT - DOUBLE FACED - ARROWS AS SHOWN
	WALL MOUNT EXIT LIGHT - SINGLE FACED
OR	CEILING OR WALL MOUNTED EMERGENCY LIGHTING UNIT.
OR	LED LIGHT FIXTURE
OR	LED LIGHT FIXTURE ON EMERGENCY POWER
	FLUORESCENT STRIP FIXTURE
	RECESSED CEILING LIGHT FIXTURE
	PANELBOARD. INSTALL W/TOP 6'-0" AFF
$	SINGLE POLE SWITCH. +3'-10" AFF TO CENTERLINE OF DEVICE BOX
$ MS	MOTION SENSOR SWITCH +3'-10" AFF TO CENTERLINE OF DEVICE BOX
$ D	DIMMER SWITCH +3'-10" AFF TO CENTERLINE OF DEVICE BOX
OC	CEILING MOUNTED OCCUPANCY SENSOR.
OC	CEILING MOUNTED DIRECTIONAL OCCUPANCY SENSOR.
	DUPLEX RECEPTACLE. +1'-6" AFF OR AS NOTED
W	DUPLEX RECEPTACLE W/GROUND FAULT PROTECTION AND WEATHERPROOF PLATE. +1'-6" AFF OR AS NOTED
G	DUPLEX RECEPTACLE W/GROUND FAULT PROTECTION. +1'-6" AFF OR AS NOTED
T	DUPLEX RECEPTACLE W/ SLIDING TAMPER PROOF COVER AND GROUND FAULT PROTECTION. +1'-6" AFF OR AS NOTED
	DOUBLE DUPLEX RECEPTACLE. +1'-6" AFF OR AS NOTED
	DUPLEX RECEPTACLE INSTALLED ABOVE COUNTERTOP
	FLUSH FLOOR BOX OR POKE-THRU DEVICE
W	VOICE OUTLET WITH 1" CONDUIT STUBBED UP OUT OF BOX TO ABOVE ACCESSIBLE CEILING. INSTALLED ABOVE COUNTERTOP. (W DENOTES WALL MOUNTED +48" AFF)
	DATA/VOICE OUTLET WITH 1" CONDUIT STUBBED UP OUT OF BOX TO ABOVE ACCESSIBLE CEILING. +1'-6" AFF OR AS NOTED.
	DATA/VOICE OUTLET WITH 1" CONDUIT STUBBED UP OUT OF BOX TO ABOVE ACCESSIBLE CEILING. INSTALLED ABOVE COUNTERTOP.
AV	A/V OUTLET DOUBLE GANG J-BOX WITH 1-1/2" CONDUIT TO ABOVE ACCESSIBLE CEILING. +1'-6" AFF OR AS NOTED.
AV	A/V OUTLET DOUBLE GANG J-BOX INSTALLED IN CEILING TILE.
110cd	WALL MOUNTED COMBINATION FIRE ALARM HORN/STROBE w/75cd RATING, FLUSH MOUNTED UNLESS NOTED OTHERWISE. (cd-DENOTES CANDELA RATING). +6'-8" A.F.F.
L	WALL MOUNTED FIRE ALARM STROBE w/75cd RATING, UNLESS NOTED OTHERWISE. (cd-DENOTES CANDELA RATING). +6'-8" A.F.F.
F	FIRE ALARM MANUAL PULL STATION. +3'-10" AFF
PE D	CEILING MOUNTED PHOTO-ELECTRIC SMOKE DETECTOR (D-DENOTES IN DUCT)
J	WALL MOUNTED JUNCTION BOX.
J	JUNCTION BOX
TV	TELEVISION OUTLET
CR	CONDUIT FROM BOX TO AN ACCESSIBLE SPACE ABOVE THE CEILING IN THE BUILDING. CARD READER W/ SINGLE GANG BOX @ 3'-10" AFF. ROUTE CONCEALED 3/4"
T	THERMOSTAT OUTLET BOX WITH 1/2"C, CONDUIT STUBBED UP OUT OF BOX TO ABOVE ACCESSIBLE CEILING. PROVIDE BUSHING ON END OF CONDUIT. THERMOSTAT AND WIRING BY OTHERS.
	INDICATES WIRING DEVICE ABOVE OR BELOW RE: DRAWING HEIGHT TO CENTERLINE OF OUTLET BOX ABOVE FINISHED FLOOR
CS	12"X12" CLOCK/SPEAKER JUNCTION BOX WITH 1/2"C, CONDUIT STUBBED UP OUT OF BOX TO ABOVE ACCESSIBLE CEILING. PROVIDE BUSHING ON END OF CONDUIT. CLOCK/SPEAKER AND WIRING BY OTHERS.
S	12"X12" SPEAKER JUNCTION BOX WITH 1/2"C, CONDUIT STUBBED UP OUT OF BOX TO ABOVE ACCESSIBLE CEILING. PROVIDE BUSHING ON END OF CONDUIT. SPEAKER AND WIRING BY OTHERS.
S	8" CEILING SPEAKER MOUNTED IN 2'X2' TILE. NO ROUGH-IN REQUIRED.
RC	DIMMING ROOM CONTROLLER
AFF	ABOVE FINISH FLOOR
FA	FIRE ALARM
ETR	EXISTING TO REMAIN

Consulting Engineers
Ph: 816.842.2800
Fx: 816.842.4884
CERTIFICATE OF AUTHORITY
2006007202

PGAV ARCHITECTS
PECKHAM GUYTON ALBERS & VIETS, INC.
1900 W.47th Place, #300, Westwood, KS 66205
(913) 362-6500 www.PGAV.COM
Copyright ©2015

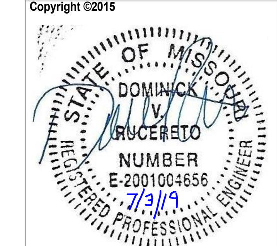

THE SEAL AND SIGNATURE APPLY ONLY TO THE DOCUMENT TO WHICH THEY ARE AFFIXED, AND EXPRESSLY DISCLAIM ANY RESPONSIBILITY FOR ALL OTHER PLANS, SPECIFICATIONS, ESTIMATES, REPORTS, OR OTHER DOCUMENTS OR INSTRUMENTS RELATING TO OR INTENDED TO BE USED FOR ANY PART OR PARTS OF THE ARCHITECTURAL OR ENGINEERING PROJECT.

#	DATE	DESCRIPTION

USKC EARLY CHILDHOOD EXHIBITS

SCIENCE CITY @ UNION STATION
30 W. PERSHING RD
KANSAS CITY, MO 64108

CONSTRUCTION DOCUMENTS

Original Size: 1 1/2" Drawing may have been reduced.
0" 1"

ELECTRICAL DETAILS

DATE: 07/03/2019
DRAWN: DVR CHECKED: DVR
PGAV #: 53494-00 CLIENT #:
SHEET #: **E811**

C:\Users\Dominick\Documents\(v16) 17-xUnion Station-Elec_drucereto.rvt
6/28/2019 10:39:41 AM